OPTISWITCH 6500 C Technical Datasheet

Microwave Level Switch for advanced hygienic applications

- Optimised sensor geometry, easy to clean
- Measures products with dielectric constant > 1.5
- Maintenance-free

© KROHNE 06/2015 - 4000648903 - TD OPTISWITCH 6500 R03 en

CONTENTS

1 Product features 3

1.1 Switch for level detection and dry-run protection ... 3
1.2 Options and variants ... 4
1.3 Measuring principle ... 5

2 Technical data 6

2.1 Technical data ... 6
2.2 Dimensions and weights ... 8

3 Installation 9

3.1 Intended use ... 9
3.2 General notes on installation ... 9
3.3 Installation requirements ... 9
3.4 Process connection ... 9
3.5 Installation of sliding connection ... 10

4 Electrical connections 12

4.1 Safety instructions ... 12
4.2 Electrical connection diagrams ... 12

5 Order information 14

5.1 Order code ... 14
5.2 Order code for process connection ... 15

1.1 Switch for level detection and dry-run protection

The **OPTISWITCH 6500 C** is a level switch for level detection and dry-run protection for liquids and solids. Through its small and optimal sensor shape, the device is easy to clean and the risk of clogging of sticky products is minimised.

The device measures liquids such as water and beer and even viscous and sticky products such as honey or toothpaste. Dry media (sugar or flour) can be also measured. The measurement is precise and not affected by the mounting position. Coating of the sensor or condensate is not detected.

The OPTISWITCH 6500 C is resistant to CIP and SIP agents. Hygienic installation is possible with the comprehensive range of accessories. For further information refer to chapter "Order information".

① LED indication
② PEEK sensor tip
③ Hygienic connection

Highlights

- Process temperature -40 ...+200°C / -40...+392°F (sliding connection)
- Insensitive to build up or foam
- Measures alternating media
- LED switching point indication through cover
- Hygienic switch entirely made of stainless steel
- Excellent for media separation
- No blockage of the pipeline

Industries

- Food & Beverage
- Pharmaceuticals
- Cosmetics

Typical applications

- Level detection of mustard
- Dry-run protection of cream
- Level detection of ketchup

1.2 Options and variants

Sliding connection / extension

The OPTISWITCH 6500 C is in two longer versions (100 mm and 250 mm / 3.9¨ and 9.8¨) available.
The device is installed with a special packing gland adapter which allows a flexible insertion length.
The devices can be used on high-temperature applications up to +200°C / +392°F; the stem is then working as a cooling neck.
Alternatively, the device can be installed with this option on tanks and pipes with insulation or on level applications with a lower switching point level.

Teach-In function

A Teach-In is necessary when the dielectric constant (ε_r) is < 2 or a medium is hard to detect as present or not, e.g. when yogurt stick to the sensor tip. Teach-In can be done directly with the product by using the teach terminals in the housing.

LED indication

The information that the switching point is triggered, is been indicated by a blue light which shines through the housing cover.

Configuration tool

The configuration tool connects the OPTISWITCH 6500 C with a computer. With a corresponding software, it is possible to fine tune the switching point, change the hysteresis or adjust damping and polarity.

1.3 Measuring principle

A high frequency signal sweep is radiated from the sensor tip into the tank / pipe. The medium will act as a virtual capacitor, which together with a coil in the sensor head, will form a circuit creating the switching point signal. This virtual capacity will depend of the dielectric value of the medium and it is well defined for most media.

The measurement is precise and unaffected by the mounting position.

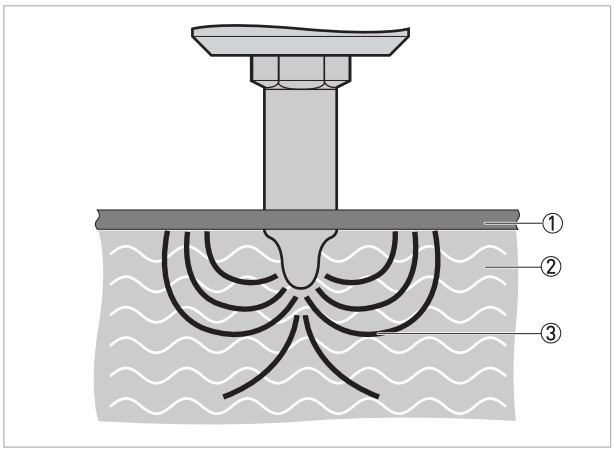

① Tank wall / pipe wall
② Medium
③ Line of electric flux

2.1 Technical data

- *The following data is provided for general applications. If you require data that is more relevant to your specific application, please contact us or your local sales office.*
- *Additional information (certificates, special tools, software,...) and complete product documentation can be downloaded free of charge from the website (Downloadcenter).*

Measuring system

Measuring principle	Electromagnetic wave, 100..180 MHz
Application range	Level detection, dry-run protection and media separation of liquids and solids.

Design

Construction	The measurement system consists of a measuring sensor and the electronic unit which is available in a compact version. The switching point is signalled by a blue LED indication through the housing cover.
Options	Sliding connection / extension for high-temperature applications
	Teach-In function for applications where the medium is hard to detect.
Accessories	Comprehensive range of adapters and process connections for hygienic installation. Please refer to the specific data sheet "Accessories".

Measuring accuracy

Resolution	±1 mm / ±0.04¨
Hysteresis	±1 mm / ±0.04¨
Reference conditions acc. to EN 60770	
Temperature	+20°C ±5°C / +70°F ±10°F
Pressure	1013 mbar abs. ±20 mbar / 14.69 psig ±0.29 psig
Relative air humidity	60% ±15%

Operating conditions

Temperature	
Ambient temperature (T_{amb})	-40…+85°C / -40…+185°F
Process temperature	-40…+85°C / -40…+185°F (short version and DN38 connection) < 1 hour, T_{amb} < +60°C / +140°F: -40…+140°C / -40…+284°F
	-40 …+200°C / -40...+392°F (with sliding connection)
Pressure	
Ambient pressure	Atmospheric
Process pressure	Standard and DN38 connection: max. 40 bar / 580 psi
	Sliding connection: max. 16 bar / 232 psi
Other conditions	
Protection category (acc. to EN 60529)	IP67 equivalent to NEMA 4X

Installation conditions

Installation	In any position. For detailed information refer to chapter "Installation".
Dimensions and weights	For detailed information refer to chapter "Dimensions and weights".

Materials

Sensor housing	Stainless steel 1.4301 / 304
Process connection	Stainless steel 1.4404 / 316L
Sensor insulation	Virgin PEEK, FDA conform
Electrical connection	Cable gland M16: plastic or nickel-plated brass
	Plug M12: nickel-plated brass

Process connections

Standard	Hygienic G ½; DN38
Other	For other hygienic process connections, e.g. Tri-Clamp®, DIN 11851 and VARIVENT®, please refer to the chapter "Order code".

Electrical connections

Power supply	12…36 VDC, 70 mA max.
Power consumption	1.7 W
Power-up time	< 2 s
Reaction time	Max. 0.1 s
Damping	0...10 s
Cable entry	M16 cable gland or M12 (4 pole Lumberg)

Output

Output (active)	Max. 50 mA, short-circuit and high-temperature protected
Output type	PNP or NPN
Output polarity	See drawing in chapter "Electrical connection".
Active "Low"	NPN and digital output; (-VDC + 2.5 V) ± 0.5 V; R_{load} = 1 kilohm
Active "High"	PNP and digital output; (VDC - 2.5 V) ± 0.5 V; R_{load} = 1 kilohm
Factory settings	Measure: ε_r > 2; damping: 0.1 s

Approvals and certifications

CE	This device fulfils the statutory requirements of the EC directives. The manufacturer certifies successful testing of the product by applying the CE marking.
Other standards and approvals	
Electromagnetic compatibility (EMC)	EN 61326-1 (2006)
Vibration resistance	IEC 68-2-6, GL test 2 (standard and DN38 connection)
Hygiene	3A for G ½ and DN38, FDA conform materials

2.2 Dimensions and weights

G ½ hygienic connection, DN38 hygienic connection and G ½ hygienic sliding connection (from left to right)

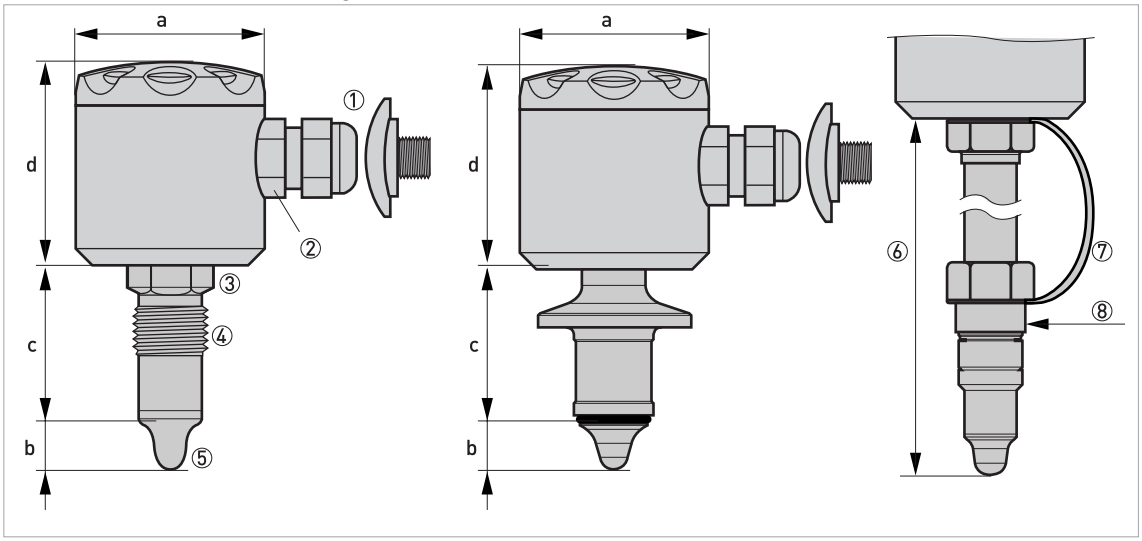

① M12×1 plug
② M16×1.5 cable gland
③ WS 22
④ G ½
⑤ PEEK tip
⑥ Sliding connection length (refer to ordering data)
⑦ Safety chain
⑧ G ½ hygienic sliding nipple

	Dimensions		Approx. weight	
	[mm]	[inches]	[kg]	[lb]
G ½ hygienic connection				
a	Ø55	Ø2.17	0.4	0.9
b	18	0.71		
c	44	1.73		
d	58	2.28		
DN38 hygienic connection				
a	Ø55	Ø2.17	0.4	0.9
b	31.5	1.20		
c	19	0.70		
d	58	2.28		

The weight for devices with sliding connection depends on the ordered length of the sliding connection (max. 0.5 kg / 1.1 lb).

3.1 Intended use

The OPTISWITCH 6500 C is a level switch for level detection and dry-run protection for liquids and solids. The device measures liquids such as water and beer and well as viscous and sticky products such as honey or toothpaste. Even dry media can be measured such as sugar or flour.

The measurement is precise and not affected by the mounting position.

Coating of the sensor or condensate is not detected.

3.2 General notes on installation

Inspect the packaging carefully for damages or signs of rough handling. Report damage to the carrier and to the local office of the manufacturer.

Do a check of the packing list to make sure that you have all the elements given in the order.

Look at the device nameplate to ensure that the device is delivered according to your order. Check for the correct supply voltage printed on the nameplate.

3.3 Installation requirements

- Use only the recommended sleeves or adapters. If other systems are used, no guarantee can be given for proper functionality or leak-tightness.
- The connection thread must have direct electrical contact with the threaded sleeve and the metal tank or pipe.
- Do not use Teflon or paper gaskets between switch and hygienic adapter. The PEEK sensor together with the stainless steel adapter will perform a hygienic tightening. Assumed that the requirements have been followed.
- The tightening torque for the sleeve should be 20...25 N·m / 14.75...18.44 lb_f·ft (for sliding connection 25...30 N·m / 18.44...22.13 lb_f·ft).
- If the tank or pipe is electrically non-conductive (e.g. plastic), the metal face of a screw-in sleeve with a diameter of at least 28 mm / 1.1¨ will suffice as reference ground.

3.4 Process connection

The hygienic ½¨ process sleeve is easy to weld into tanks or pipes. The marking points to the centre of the future position of the cable gland or M12 plug connector. This form of assembly allows installation in conformity with standards of hygiene (to 3A, FDA).

Various hygienic adapter sleeves are available for fitting to other process connections. For more information please refer to chapter "Order code".

The sensor can be installed in any desired position.

3.5 Installation of sliding connection

The following drawing shows how the sliding connection can be used for at least 4 applications:

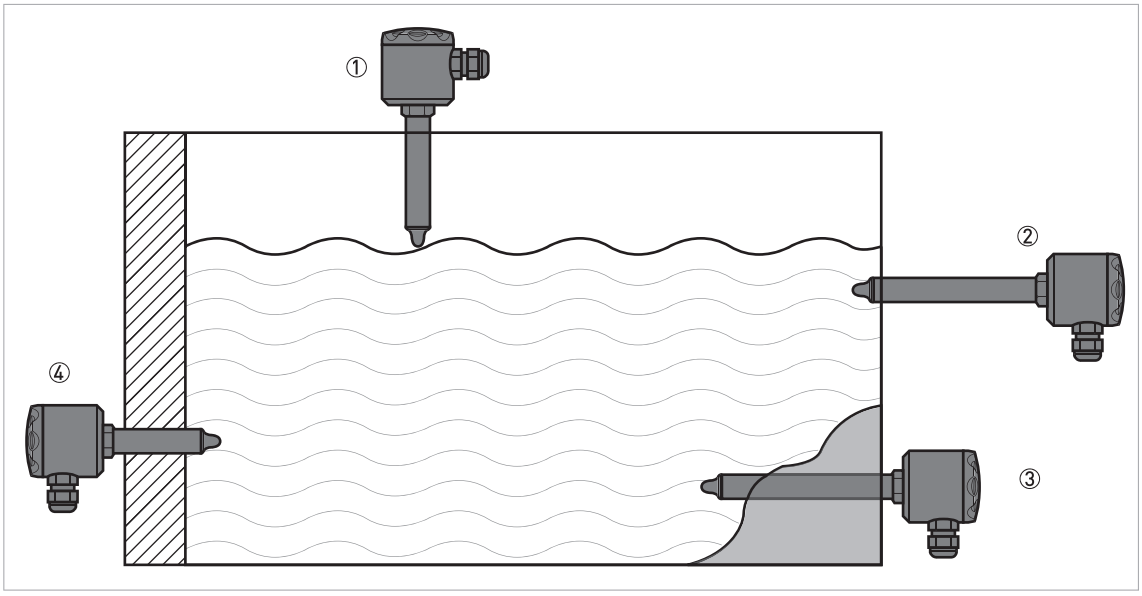

Figure 3-1: Possible applications for sliding connection

① Mounted at the top of a tank to adjust to a certain level.

② Serving as a cooling neck in high media temperature applications.

③ Adjusted to place the sensor tip deeper inside the tank (for lumpy or sticky media).

④ To reach in through insulation material.

The OPTISWITCH 6500 C with sliding connection can be mounted with a static pressure up to 16 bar / 232 psi. To prevent personnel injuries, it is essential that the safety chain is mounted correctly and undamaged.

It is essential that the max. ambient temperature for the electronics is never exceeded.

The operating conditions for the sliding connection in different media temperatures and specified ambient temperatures can be found in the following drawing.

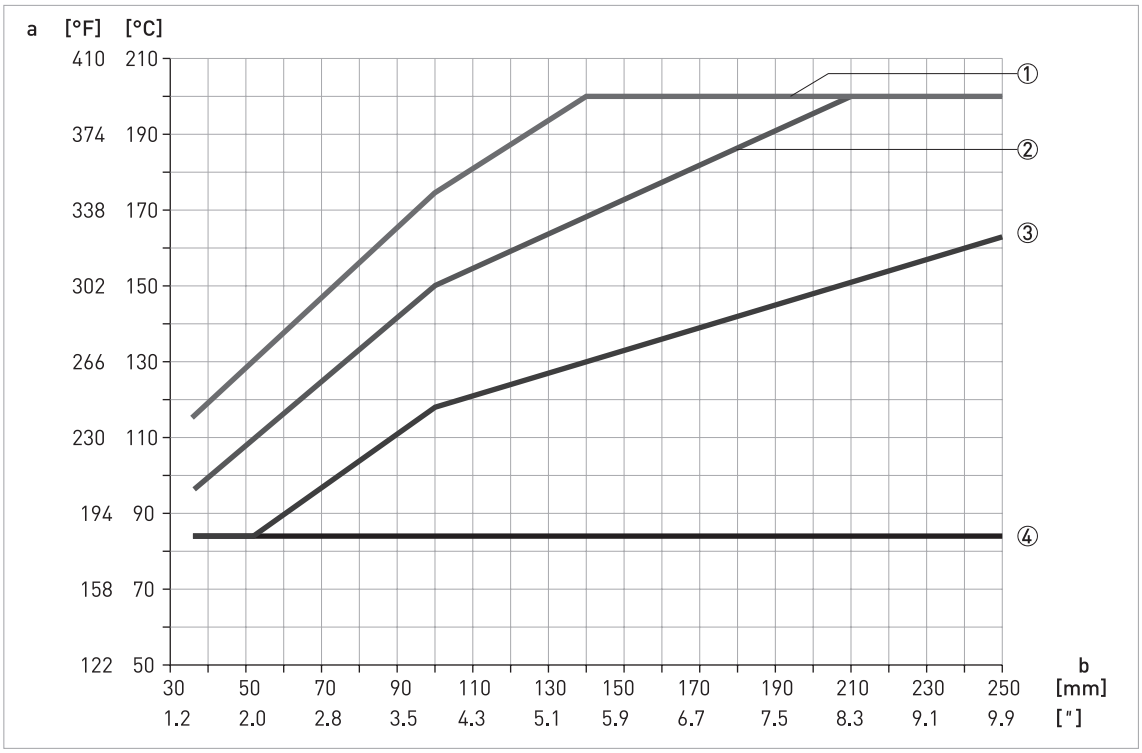

Figure 3-2: Media temperature versus external length of sliding connection

a = media temperature in [°C] or [°F]
b = external length of sliding connection in [mm] or ["]

① T_{amb} = max. +40°C / +104°F
② T_{amb} = max. +60°C / +140°F
③ T_{amb} = max. +75°C / +167°F
④ T_{amb} = max. +85°C / +185°F

Example, how to read the drawing:

A 250 mm / 9.9" sliding connection is mounted in a tank with a total insertion length of 150 mm / 5.9". Hence the external length of the sliding connection will be:
250 - 150 = 100 mm or 9.9 - 5.9 = 4".

The media temperature will be max. +160°C / +320°F.

Read the x-axis at 100 mm / 4" and the y-axis at +160°C / +320°F and find that the ambient temperature must be kept below +40°C / +104°F. In case the radiated heat from the tank will cause a higher ambient temperature at the housing efficient insulation of the tank must be established.

4.1 Safety instructions

All work on the electrical connections may only be carried out with the power disconnected. Take note of the voltage data on the nameplate!

Observe the national regulations for electrical installations!

For devices used in hazardous areas, additional safety notes apply; please refer to the Ex documentation.

Observe without fail the local occupational health and safety regulations. Any work done on the electrical components of the measuring device may only be carried out by properly trained specialists.

Look at the device nameplate to ensure that the device is delivered according to your order. Check for the correct supply voltage printed on the nameplate.

4.2 Electrical connection diagrams

Description of normally open (NO) and normally closed (NC)

Normally open	Normally closed
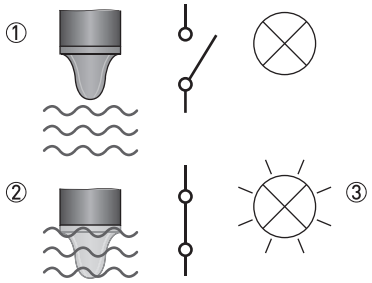 ① 0 mA ② 50 mA ③ LED	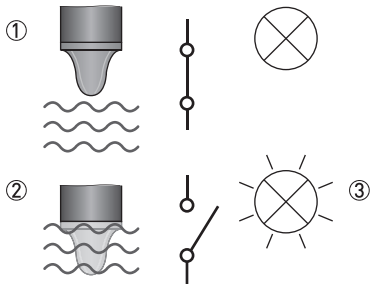 ① 50 mA ② 0 mA ③ LED

PNP

Normally open		Normally closed	
M12	M16	M12	M16
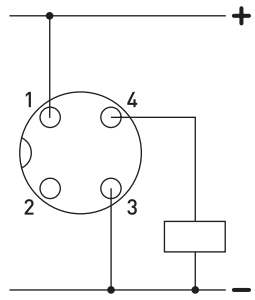	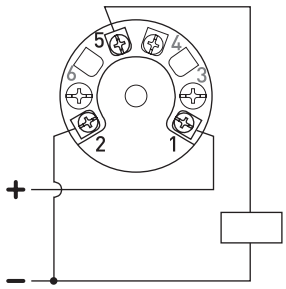	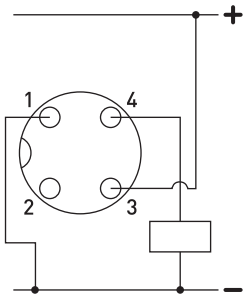	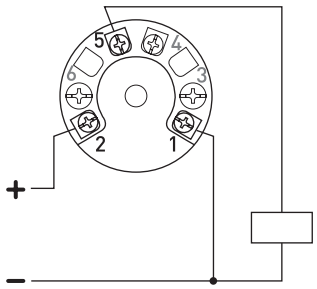

NPN

Normally open		Normally closed	
M12	M16	M12	M16
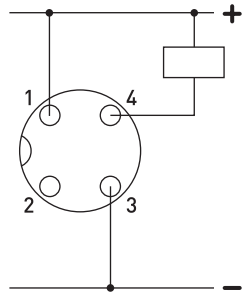	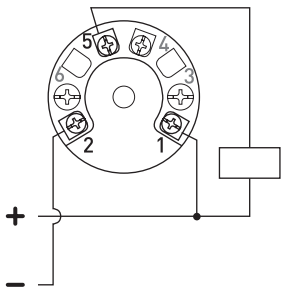	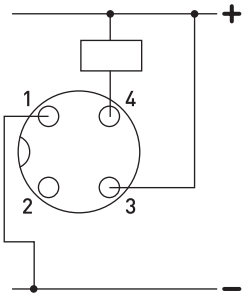	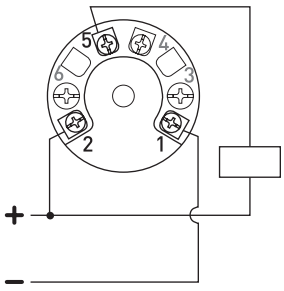

M12 plug

1: brown; 2: white; 3: blue; 4: black

Digital output

Normally open	Normally closed
M16	M16
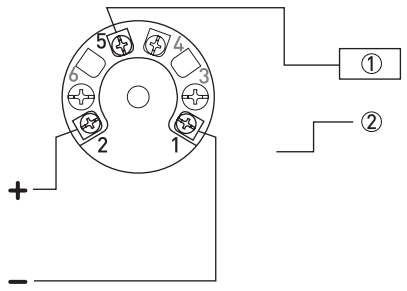	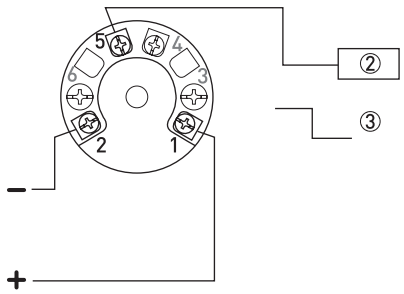
① PLC ② active high	① PLC ② active low

5.1 Order code

		1	OPTISWITCH 6500 C, with IP67 (equivalent to NEMA 4X), stainless steel housing – FDA compliant materials The use of VGP7 process connections is required for 3A approved switches.							
			Process connection							
			For hygienic use in combination with VGP7 process connections							
			1	G ½ – standard sensor length 18 mm / 0.7¨ (for use with hygienic process connections)						
			4	DN38 hygienic connection incl. EPDM O-ring, 3A certified – insertion length of 18 mm / 0.7¨						
			For non-hygienic use							
			2	G ½ – with rigid extended sensor 100 mm / 3.9¨ (sliding connection)						
			3	G ½ – with rigid extended sensor 250 mm / 9.8¨ (sliding connection)						
				Electrical connection						
				1	M16 – polyamid cable gland included					
				2	M16 – brass cable gland included					
				3	M12 – 4-pin connector plug					
					Approvals					
					0	Without				
					1	Certified according to 3A, G ½, DN38 in combination with hygienic adapter VGP7				
						ATEX II 3G Ex nA II T5 ①				
						ATEX II 1G Ex ia IIC T5 ①				
					4	ATEX II 1D Ex tD A20 IP67 100°C ②				
						Output configuration				
						0	Standard			
						1	Customer settings – based on data from an installed device. "% of triggering, damping, hysteresis, output mode" to be specified separately.			
VGP9	4	1					0	0	0	Order code

① For more data about how to order this option, speak to your supplier
② Applicable only for the LS 6500

Order code for configuration tool (incl. interface unit + USB cable + CD with driver + alligator clips + M12 connection cable)

XGP9	0	0	0	0	1	0	Order code

5.2 Order code for process connection

VGP7	4	**Process connection type**						
		0	Without					
		1	Weld-in sleeve; HWN 200					
		2	Collared weld-in sleeve; HWN 210					
		3	Weld-in sleeve with shoulder for pipes DN25…50; HWN 220					
		4	Hygienic adapter for G 1 process connection; HGA 200					
		7	Spherical weld-in sleeve for angled sensor mounting; HWN 250					
		8	DRD – DN50 sanitary connection; HMM 250					
		A	DIN 11851 – DN25 conical nozzle including rotating union nut and gasket; HMT 225					
		B	DIN 11851 – DN50 conical nozzle, including rotating union nut and gasket; HMT 250					
		C	VARIVENT® flange type N – DN40/50, including O-ring; HVF 250					
		D	2¨ Tri-Clamp® – ; DN50 DIN 32676; 51 mm ISO 2852; including EPDM seal; HTC 250					
		U	DIN 11851 – DN40 conical nozzle, including rotating union nut and gasket; HMT 240					
		V	1½¨ Tri-Clamp® – DN25/40 DIN 32676; 25/38 mm ISO 2852; including EPDM seal; HTC 240					
		W	SMS adapter 1145 / 2¨, including union nut; HSM 251					
		X	Non-hygienic weld-in sleeve (with standard surfaces only); NWM 200					
		Z	Allen screw blanking plug; HST 200					
					Surfaces			
					0	Standard		
					1	Inside electro-polished		
VGP7	4		0	0		0	0	Order code

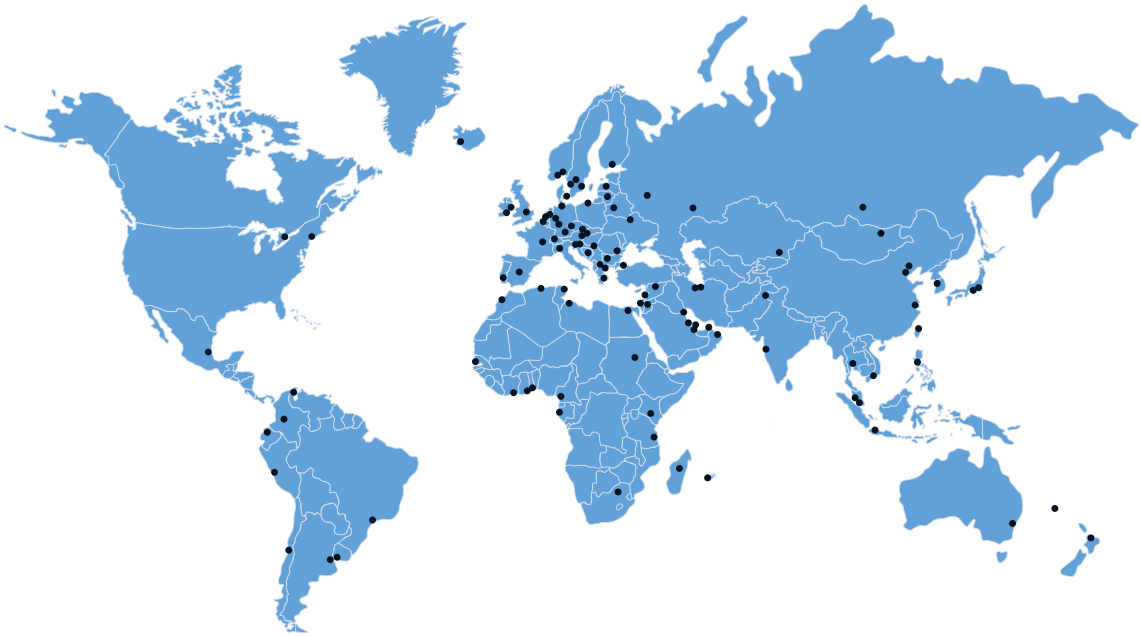

KROHNE – Process instrumentation and measurement solutions

- Flow
- Level
- Temperature
- Pressure
- Process Analysis
- Services

Head Office KROHNE Messtechnik GmbH
Ludwig-Krohne-Str. 5
47058 Duisburg (Germany)
Tel.: +49 203 301 0
Fax: +49 203 301 10389
info@krohne.com

The current list of all KROHNE contacts and addresses can be found at:
www.krohne.com

© KROHNE 06/2015 - 4000648903 - TD OPTISWITCH 6500 R03 en - Subject to change without notice.