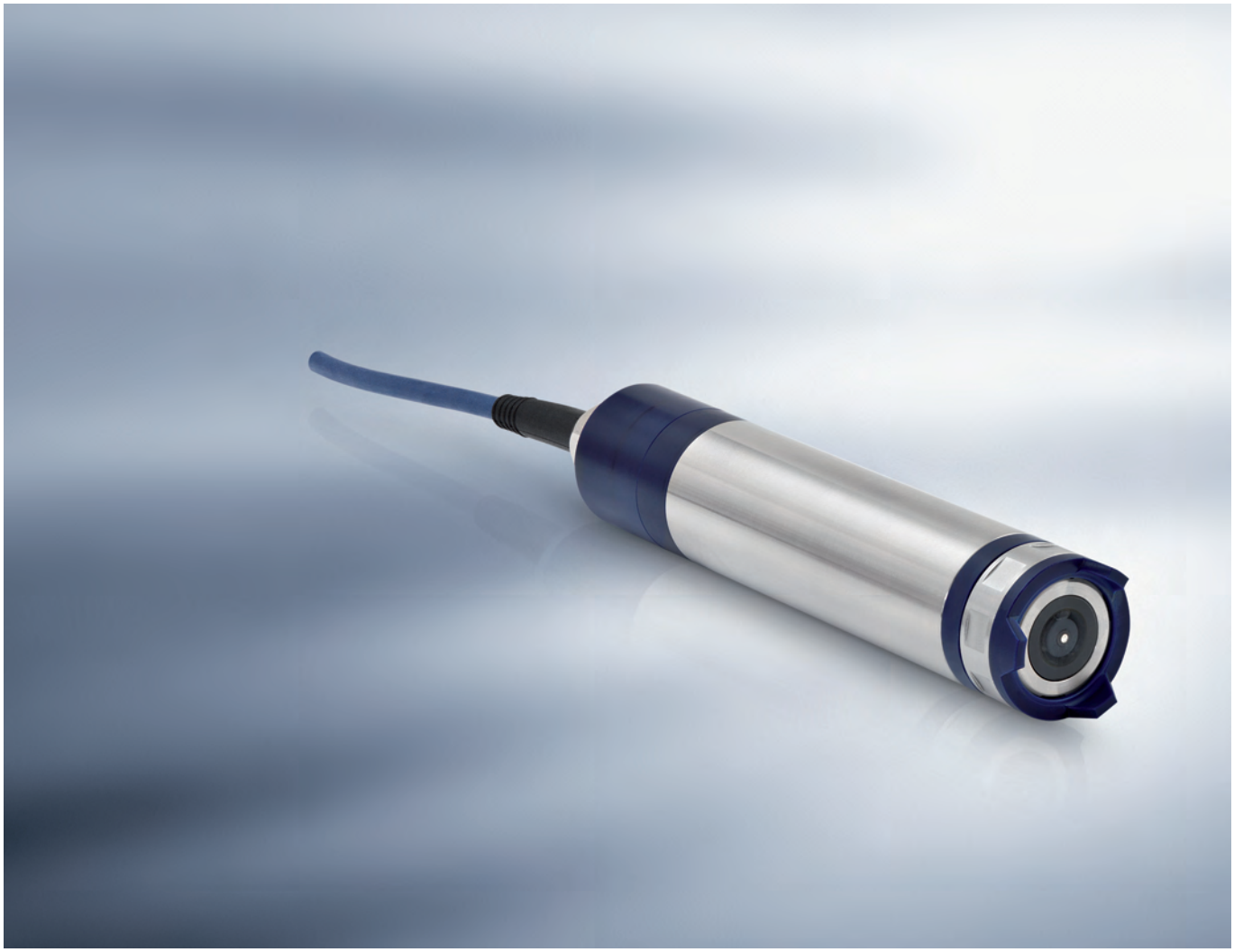

OPTISENS ADO 2000 Technical Datasheet

Amperometric dissolved oxygen sensor for water and wastewater industry

- Stainless steel housing for harsh applications
- Longer maintenance intervals due to large electrolyte reservoir
- Easy maintenance via electrode cartridge replacement

The documentation is only complete when used in combination with the relevant documentation for the signal converter.

© KROHNE 04/2016 - 4003688501 - TD OPTISENS ADO 2000 en

KROHNE

CONTENTS

1 Product features 3

1.1 OPTISENS ADO 2000 amperometric dissolved oxygen sensor 3
1.2 Design and options 4
1.3 Measuring principle 5

2 Technical data 6

2.1 Technical data 6
2.2 Dimensions 7

3 Installation 8

3.1 General notes on installation 8
3.2 Intended use 8
3.3 General installation instructions 9
3.4 Installing or replacing the sensor 10

4 Electrical connections 11

4.1 Safety instructions 11
4.2 Connecting the sensor cable to the signal converter 11

5 Order information 13

5.1 Order code 13
5.2 Consumables 13

6 Notes 14

1.1 OPTISENS ADO 2000 amperometric dissolved oxygen sensor

Amperometric dissolved oxygen sensors are widely used to control and monitor oxygen concentration during the biological treatment of wastewater. The dissolved oxygen sensor OPTISENS ADO 2000 from KROHNE has a standardised robust design and a long lifespan.

The robust stainless steel body avoids coating on the surface and reduces the manual cleaning effort to a minimum. Furthermore the Teflon® membrane on the sensor tip and the large electrolyte reservoir extend the maintenance interval and reduces reading deviation.

① Attached cable
② Stainless steel body
③ Electrode cartridge

Highlights

- Fast response time in all applications
- Integrated temperature compensation for reliable measuring results
- Easy maintenance due to exchangeable electrode cartridge
- Suitable for connection to the MAC 100 signal converter
- Flexible installation due to 10 m /33ft. or 15 m / 49 ft. cable length

Industries

- Industrial water
- Municipal water
- Water

Applications

- Controlling biological treatment in wastewater aeration basins
- Prevention of water pollution
- Fish farming (fresh water)
- Drinking water monitoring

1.2 Design and options

The sensor type is equipped with a large electrolyte reservoir and a dirt-repellent Teflon® membrane.

It can be easily adapted to various application requirements and can be installed directly into a basin with the telescopic rod SENSOFIT IMM 2000.

The robust stainless steel sensor housing makes OPTISENS ADO 2000 suitable for almost all standard water and wastewater applications. The sensor is suitable for connection to the MAC 100 signal converter.

Made to Fit

Mounting assemblies to SENSOFIT series

As a complete provider for water analysis, we naturally offer a complete range of assemblies, like retractable, immersion and flow-through assemblies in a wide range of materials. Special versions for special operating conditions are available on request.

For the OPTISENS ADO 2000 sensor type the following individual assemblies are available:

- SENSOFIT IMM 2000 series - Immersion assemblies

For further information please consider the technical datasheets.

1.3 Measuring principle

The OPTISENS ADO 2000 is an amperometric dissolved oxygen sensor with a galvanic electrode cartridge consisting of membrane covered electrodes in an electrolyte solution.

Oxygen enters the electrode cartridge via the membrane. The essential potential to reduce oxygen at the silver cathode and oxidise lead at the lead anode is provided by the customised electrode/electrolyte system (galvanic cell). No external power supply and time consuming polarisation is needed. The resulting electrochemical current is measured as it depends on the concentration of oxygen.

The complete cartridge is easily replaceable without the need of exchanging the electrolyte solution.

2.1 Technical data

- *The following data is provided for general applications. If you require data that is more relevant to your specific application, please contact us or your local sales office.*
- *Additional information (certificates, special tools, software,...) and complete product documentation can be downloaded free of charge from the website (Downloadcenter).*

Design

Measuring principle	Amperometric
Measuring range	0...20 mg/l / 0...20 ppm dissolved oxygen
Sensor type	Installation with MAC 100 signal converter
Shaft diameter	40 mm / 1.57"

Operating conditions

Temperature range	0...+50°C / +32...+122°F
Pressure range	Max. 6 bar at 20°C / 87 psi at 68°F
Measuring accuracy	± 1% of end of range (20 mg/l)
Response time	t_{90} < 180 seconds (at 25°C / 77°F)
Flow rate	min. 5 cm/second / 1.97"/second

Installation conditions

Ingress protection	IP68
Weight	Approx. 0.7 kg / 1.54 lb

Materials

Sensor shaft	Stainless steel 1.4305
Sensor head and protective basket	PVC
Electrode cartridge	Teflon, PVC

Electrical connection

Cable	10 m / 32.8 ft or 15 m / 49 ft attached cable

Approvals and certificates

CE	
This device fulfils the statutory requirements of the EC directives. The manufacturer certifies successful testing of the product by applying the CE mark.	
Electromagnetic compatibility	EMC Directive 2004/108/EC (valid until 2016/04/19) or EMC Directive 2014/30/EU (valid from 2016/04/20)
Low voltage directive	Low Voltage Directive 2006/95/EC (valid until 2016/04/19) or Low Voltage Directive 2014/35/EU (valid from 2016/04/19)

For further information contact your local sales office.

2.2 Dimensions

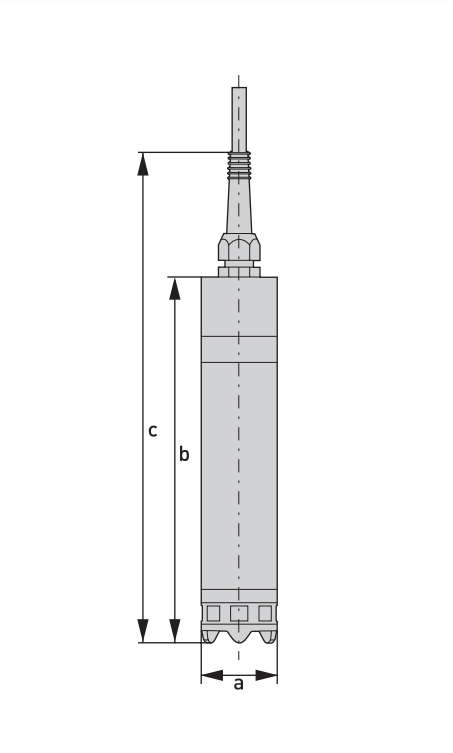

Figure 2-1: Dimensions

	Dimensions	
	[mm]	[inch]
a	40	1.57
b	193	7.6
c	258	10.16

3.1 General notes on installation

Inspect the packaging carefully for damages or signs of rough handling. Report damage to the carrier and to the local office of the manufacturer.

Do a check of the packing list to make sure that you have all the elements given in the order.

Look at the device nameplate to ensure that the device is delivered according to your order.

3.2 Intended use

Responsibility for the use of the measuring devices with regard to suitability, intended use and corrosion resistance of the used materials against the measured fluid lies solely with the operator.

The manufacturer is not liable for any damage resulting from improper use or use for other than the intended purpose.

The intended use of OPTISENS ADO 2000 sensors is the measurement of dissolved oxygen in water applications. The sensor is suitable for connection to the MAC 100 signal converter.

3.3 General installation instructions

The sensor tip must always have full contact with water.

The mounting position of the sensor should be 25°...75° from vertical position (sensor tip pointing downwards). Non-observance might cause air bubbles to stick to the sensor tip.

For optimal positioning use an immersion assembly as shown in the following image.

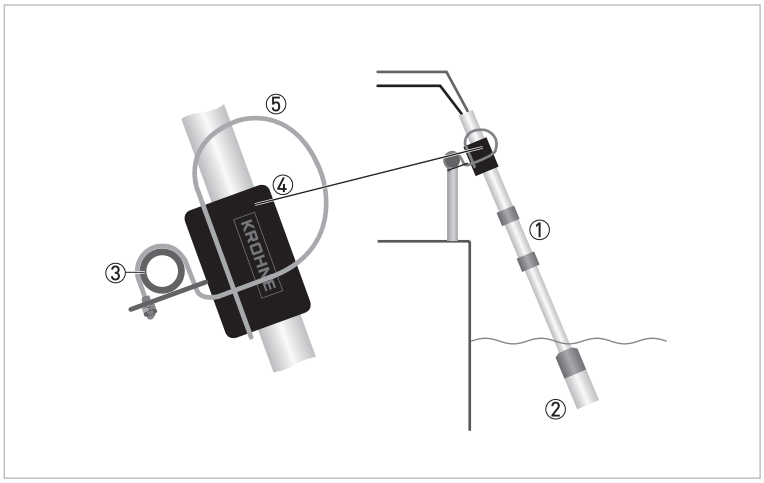

Figure 3-1: Optimal mounting position

① Immersion assembly
② Sensor holder
③ Handrail
④ Rod holder
⑤ Mounting bracket

Install the sensor in a light angle to avoid wrong measurement results due to a dirty sensor or trapped air on the sensor.

3.4 Installing or replacing the sensor

All work on the electrical connections may only be carried out with the power disconnected. Take note of the voltage data on the nameplate!

For further instructions on installation into SENSOFIT IMM 2000 refer to the relevant manual.

- Insert the sensor cable through the immersion assembly.
- Fasten the sensor using the 6 screws from the immersion assembly.
- Connect the wires to the MAC 100 signal converter. For further information refer to *Connecting the sensor cable to the signal converter* on page 11

For removing the sensor, repeat the steps above in reverse order.

After assembly into SENSOFIT IMM 2000 the sensor has to be calibrated.

4.1 Safety instructions

All work on the electrical connections may only be carried out with the power disconnected. Take note of the voltage data on the nameplate!

Observe the national regulations for electrical installations!

Observe without fail the local occupational health and safety regulations. Any work done on the electrical components of the measuring device may only be carried out by properly trained specialists.

Look at the device nameplate to ensure that the device is delivered according to your order. Check for the correct supply voltage printed on the nameplate.

4.2 Connecting the sensor cable to the signal converter

All work on the electrical connections may only be carried out with the power disconnected. Take note of the voltage data on the nameplate!

Look at the device nameplate to ensure that the device is delivered according to your order.

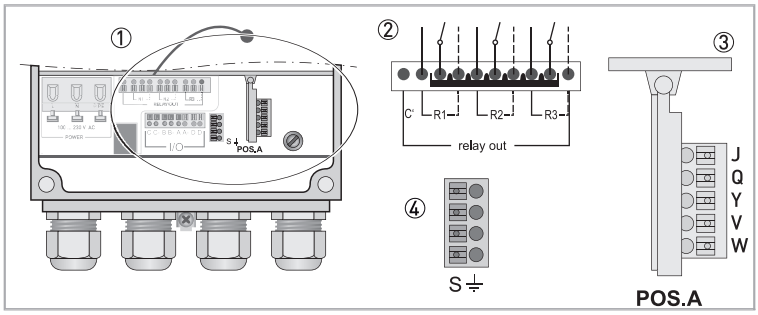

Figure 4-1: Sensor connection terminals on the signal converter

① Sensor connection terminal
② Relays
③ Terminal block A: terminals for sensors
④ Terminal block S (protective earth)

Wire	Terminal block Pos.A
Red	Q
Blue	W

Wire	R3 (Relay out)
Green	N.O.
Grey	Rx

Wire	Terminal S
Black	S

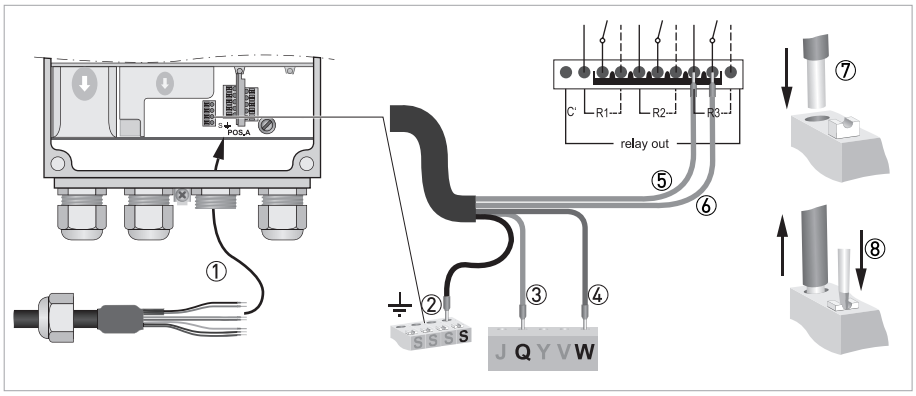

Figure 4-2: Connecting the sensor cable

The following instructions describe the connection of the sensor cable.

Connecting the sensor cable to the signal converter

- Remove the terminal cover.
- Thread the sensor cable through the outer right cable gland ①.
- Push the wires ⑦ into terminal Q ③ and W ④ and S ②.
- To remove a wire, press down the white clip ⑧ on the corresponding terminal and pull the wire out.

5.1 Order code

The characters of the order code highlighted in light grey describe the standard.

VGA E	4	**Sensor type**												
		B	OPTISENS ADO 2000											
			Measuring range											
			1	0...20 mg/l (ppm)										
				Sensor features										
				1	Stainless steel									
					Process conditions									
					2	0...+50°C, 6 bar at 20°C / +32...+122°F, 87 psi at 68°F								
						Enclosure type								
						A	Immersion type for mounting on SENSOFIT IMM 2000 telescopic rod							
							Sensor options							
							B	Temperature compensation						
								Sensor-cable connection						
								4	Attached cable					
									Cable					
									A	Cable-ADO-W 2000				
										Cable features				
										1	Standard			
											Length			
											3	10 m / 33 ft.		
											4	15 m / 49 ft.		
												Cable options		
												1	Core end sleeve	
													Documentation	
													0	none
													1	English
													2	German
													3	French
													4	Spanish
VGA E	4													

5.2 Consumables

Consumables	Order code
Electrode cartridge	XGA S 020060

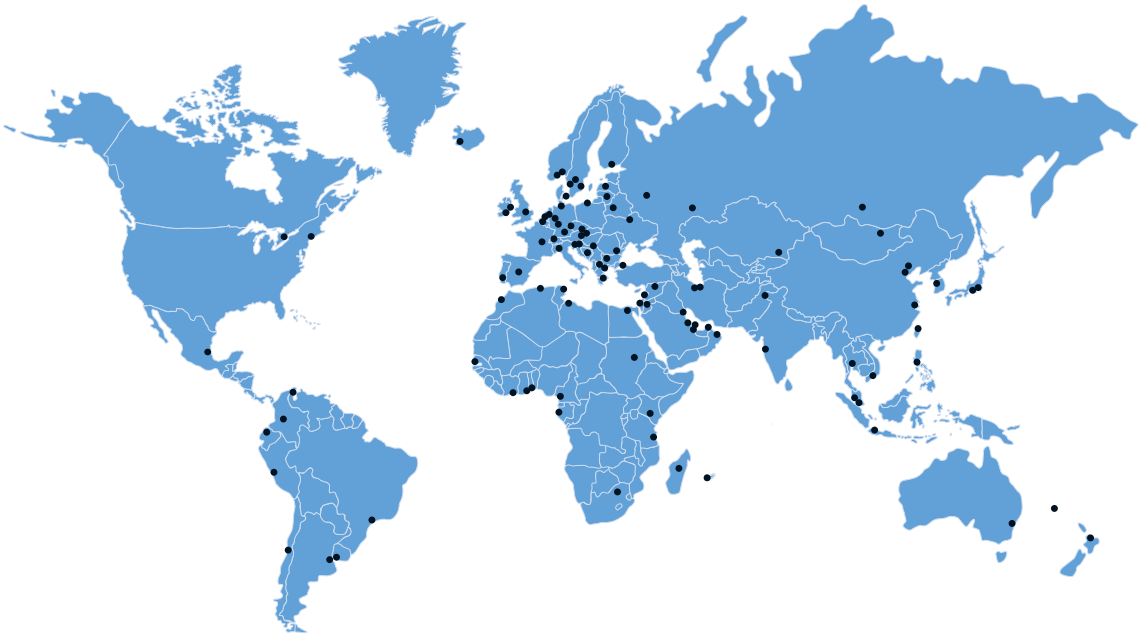

KROHNE – Process instrumentation and measurement solutions

- Flow
- Level
- Temperature
- Pressure
- Process Analysis
- Services

Head Office KROHNE Messtechnik GmbH
Ludwig-Krohne-Str. 5
47058 Duisburg (Germany)
Tel.: +49 203 301 0
Fax: +49 203 301 10389
info@krohne.com

The current list of all KROHNE contacts and addresses can be found at:
www.krohne.com

© KROHNE 04/2016 - 4003688501 - TD OPTISENS ADO 2000 en - Subject to change without notice.