MAC 100 Technical Datasheet

Multiparameter signal converter

- Robust aluminium or hygienic stainless steel housing
- Multiparameter device
- Dual channel converter

The documentation is only complete when used in combination with the relevant documentation for the sensor.

© KROHNE 10/2016 - 4001957402 - TD MAC 100 R02 en

KROHNE

1 Product features 4

1.1 Multiparameter converter for liquid analytical measurements 4
1.2 Design and options 6
1.3 Sensor input combinations 7
1.4 Measuring principle 7

2 Technical data 8

2.1 Technical data table 8
2.2 Dimensions and weight 12
2.2.1 Housing die-cast aluminium 12
2.2.2 Housing stainless steel 13
2.2.3 Mounting plate die-cast aluminium 14
2.2.4 Mounting plate stainless steel 15

3 Installation 16

3.1 General notes on installation 16
3.2 Intended use 16
3.3 Storage and transport 16
3.4 Wall mounting 17

4 Electrical connections 20

4.1 Safety instructions 20
4.2 Used abbreviations 20
4.3 Important device-specific notes on electrical connection 21
4.4 Opening and closing the converter housing 22
4.4.1 Die-cast aluminium housing 22
4.4.2 Stainless steel converter housing 22
4.5 Overview of the terminal compartment 23
4.6 Connecting the signal cables 24
4.7 Connecting the power supply 24
4.8 Description and properties of the outputs and the input 26
4.8.1 Current output 26
4.8.2 Relay outputs 26
4.8.3 Control input (passive) 27
4.9 Connection diagrams of the outputs and the input 28
4.9.1 Important notes 28
4.9.2 Description of electrical symbols 28
4.9.3 Block diagram 29
4.9.4 Current output (active) 29
4.9.5 Relay outputs 30
4.9.6 Control input 30
4.10 Electrical connection of the outputs and the input 31
4.10.1 Connecting the current outputs 31
4.10.2 Connecting the relay outputs 32

5 Order information 35

5.1 Order code 35

6 Notes 37

1.1 Multiparameter converter for liquid analytical measurements

The MAC 100 has a standardised operating concept, which is praxis proven since years in flow and level converters. With this KROHNE is the first manufacturer to have a unified device concept to measure physical parameters as well as analytical parameters. The benefit for you is that quick commissioning, reduced training times and standardisation of your hardware simplify the operating process and further reduce your costs.

① Display
② Operation keys
③ Cable glands

Highlights

- Robust aluminium housing (IP66/67)
- Hygienic stainless steel housing (IP66/67/IP69)
- Up to 2 sensor inputs + temperature input
- Supports temperature compensation of different parameters
- Calibration and error logbook
- KROHNE General Device Concept (GDC)
- Standardised operating concept of flow and level extended to analytical parameters
- Multi parameter device

Industries

- Water / Waste water
- Power industry
- Process industry
- Food and Beverages

1.2 Design and options

(MAC 100 - die cast aluminium)

For tailored solutions

The "modular structure" means that the device can be adapted perfectly for your requirements: Select between the robust die-cast aluminium and the hygienically designed stainless steel housing.You specify the number and type of signal inputs and outputs, you define the complexity of the measuring point and the number of parameters. The standardised user interface also speeds up commissioning of the device and opens access to a wide range of diagnostic functions for devices and processes.

(MAC 100 - stainless steel)

Besides the robust aluminum die cast housing, the hygienically designed stainless steel housing makes the MAC 100 suitable for almost all applications in food and beverage. The ingress protection class of IP69 protects the device against high pressure and steam cleaning. In combination with our OPTISENS sensors KROHNE offers a solution for food and beverage industries.

(OPTISENS CL 1100 sensor)

Sensor series

You can connect both the analogue sensors of the OPTISENS series and the digital sensors of the OPTISENS 2000 series. This means one single converter can handle the wide variety of applications in the different industries.

1.3 Sensor input combinations

You can order the signal converter as single or dual channel device.

Possible combinations	Sensor input A	Sensor input B
Single channel version	pH / ORP	-
	Cl_2 / ClO_2 / O_3	-
	conductive conductivity	-
	inductive conductivity	-
	optical dissolved oxygen	-
	amperometric dissolved oxygen	-
	turbidity	-
Dual channel version	pH / ORP	pH / ORP
	pH / ORP	conductive conductivity
	pH / ORP	inductive conductivity
	Cl_2 / ClO_2 / O_3	pH / ORP
	conductive conductivity	conductive conductivity
	inductive conductivity	inductive conductivity

1.4 Measuring principle

The measuring principle depends on the used sensor(s), for further information refer to the sensor manual(s).

2.1 Technical data table

- *The following data is provided for general applications. If you require data that is more relevant to your specific application, please contact us or your local sales office.*
- *Additional information (certificates, special tools, software,...) and complete product documentation can be downloaded free of charge from the website (Downloadcenter).*

Measuring system

Measuring principle	The measuring principle depends on the used sensor(s), for further information refer to the sensor manual(s).
Application range	Continuous measurement of parameters in liquid analysis applications.
Measuring range	The measuring range depends on the used sensor(s), for further information refer to the sensor manual(s).

Design

Construction	A typical measuring system consists of: • MAC 100 multiparameter signal converter • 1 (or up to 2) sensors of the OPTISENS series • Sensor cable • SENSOFIT mounting assembly
Option	The device is available as a one channel (one signal input) or a two channel version (two signal inputs). You can connect one sensor to the one channel version and up to two sensors to the two channel version.
Sensors	For further information refer to the manual of the relevant sensor.
	Also note the table with the sensor input combinations on page 7.

Display and user interface	
Graphic display	LC display, backlit white
	128 x 64 pixels
	Note: ambient temperatures below -25°C / -13°F may affect the readability of the display!
Operating elements	4 push buttons for operator control of the signal converter without opening the housing.
Operating menu	The operation menu consists of the measuring mode and the menu mode:
	Measuring mode: 4 pages (first and second measuring page with measuring results, status message and trend diagram).
	Menu mode: variety of main and submenus that allow to customise the device according to the demands of the measuring point.
Operating and display languages	English, German, French, Spanish
Units	Metric, British and US units selectable as required from lists.

Measuring accuracy

Maximum measuring error	For further information refer to the manual of the relevant sensor.
Repeatability	For further information refer to the manual of the relevant sensor.
Resolution	Temperature: 0.1°C / 0.1°F
	For further information refer to the manual of the relevant sensor.

Operating conditions

Temperature	
Ambient	-15...+55°C / +5...131°F
	Note: the manufacturer strongly recommends to protect the signal converter from external heat sources such as direct sunlight as higher temperatures reduce the life cycle of all electronic components!
Storage	-40...+70°C / -40...+158°F

Other conditions	
Humidity (ambient)	Max. 90% at 55°C / 131°F (not condensing)
Pressure	For information about the process pressure of the used sensor(s) refer to the relevant sensor documentation!
Ingress protection	IP66/67 acc. to IEC 60529 IP69 (only stainless steel housing) acc. to IEC 60529 NEMA 4/4X

Installation conditions

Installation	Only wall mounting is possible, always assure a vertical mounting orientation!
Dimensions and weights	For detailed information see chapter "Dimensions and weights".

Materials

Signal converter housing	Die-cast aluminium (polyurethane coated) Stainless steel 1.4404 (AISI 316L)
Sensor	For housing materials, process connections, liners, grounding electrodes and gaskets, see the technical documentation for the sensor.

Electrical connections

General	Electrical connection is carried out in conformity with the VDE 0100 directive "Regulations for electrical power installations with line voltages up to 1000 V" or equivalent national regulations.
Power supply	
Voltage	100…230 VAC (-15% / +10%), 50/60 Hz; 240 VAC + 5% is included in the tolerance range.
	24 VAC/DC (AC: -25 / +30% or DC:+15% / -10%)
Power consumption	5 W at 24 VDC 8 VA at 230 VAC
Fuse	0.8 AT/250 V (high breaking capacity), 5 x 20 mm / 0.2 x 0.8"
Line frequencies	50/60 Hz
Power rating	22 VA (maximum)
Inrush current	$I_{N, eff}$ = 97 mA, t_{15} = 1.5 ms, t_{Peak} = 200 µs, I_{Peak} = 22.6 A
Cable glands	4 x M20 M20x1.5: Plastic (polyamid 6) M20 to 1/2-NPT (female): Brass M20x 1.5: Stainless steel (IP69)

Inputs and outputs

General	All in- and outputs are electrically isolated from each other and from all other circuits.
	All operating data and output values can be adjusted.
Description of used abbreviations	U_{ext} = external voltage; R_L = load + resistance; U_o = terminal voltage; I_{nom} = nominal current
Inputs	
Sensor inputs	Up to 2, depending on the version. For further information refer to the manual of the relevant sensor.
Control input	Passive, not polarity sensitive, $U_{ext, max} \leq 32$ VDC, I_{nom} = 6.5 mA with U_{ext} = 24 VDC, I_{nom} = 8.2 mA with U_{ext} = 32 VDC
	Switching point for identifying "contact open or closed": contact open ("off") at $U_0 \leq 2.5$ V with I_{nom} = 0.4 mA, contact closed ("on") at $U_0 \geq 8$ V with I_{nom} = 2.8 mA
Outputs	
Current outputs	Three isolated outputs (4...20 mA), all galvanic isolated, errors signals 3.25 mA and 22 mA, active mode
	Output data: depending on sensor
	Operating data: $U_{int, nom}$ = 15 VDC, I = 0(4)...22 mA, $I_{max} \leq 22$ mA, $R_L \leq 550\ \Omega$
Relay outputs	Three electro-mechanical relays that can work as alarm relays or limit switches
	Possible conditions: NO (normally open) or NC (normally closed)
	Contact ratings: • Relays for low voltages: U ≤ 30 VDC, I ≤ 1 A, resistive load (PELV / SELV) or U ≤ 50 VAC, I ≤ 4 A, resistive load (PELV / SELV) • Relays for high voltages: U = 100...230 VAC, I ≤ 4 A, max. 1000 VA resistive load

Approvals and certifications

CE	
The device meets the essential requirements of the EU directives. The CE marking indicates the conformity of the product with the European Union legislation applying to the product and providing for CE marking.	
For full information of the EU directives and standards and the approved certifications, please refer to the EU declaration on the website of the manufacturer.	
Other approvals and standards	
NAMUR recommendation	NE 21 and NE 43
Shock resistance	IEC 60068-2-27

2.2 Dimensions and weight

2.2.1 Housing die-cast aluminium

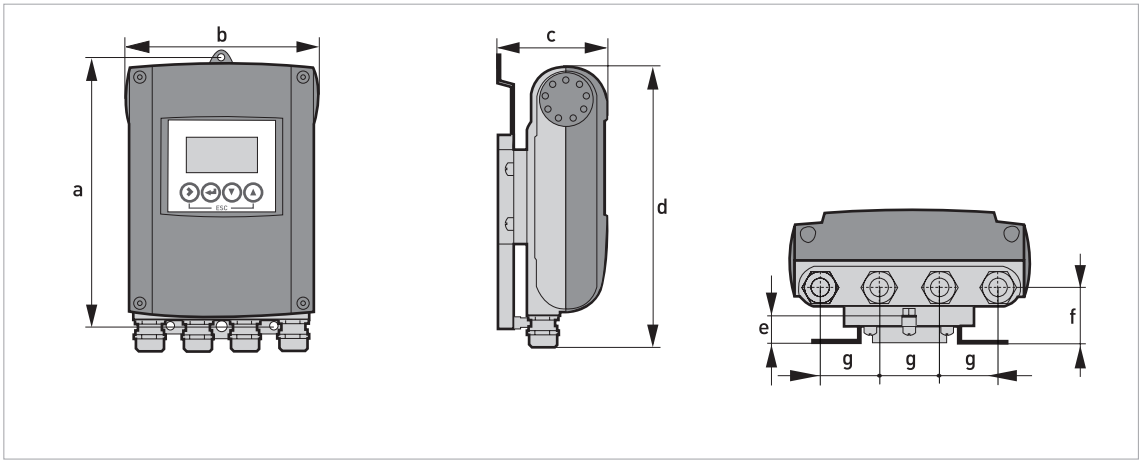

Figure 2-1: Dimensions die-cast aluminium housing

Dimensions and weights in mm and kg

	Dimensions [mm]							Weight [kg]
	a	b	c	d	e	f	g	
Wall-mounted version	241	161	95.2	257	19.3	39.7	40	1.9

Dimensions and weights in inch and lb

	Dimensions [inch]							Weight [lb]
	a	b	c	d	e	f	g	
Wall-mounted version	9.50	6.34	3.75	10.12	0.76	1.56	1.57	4.2

2.2.2 Housing stainless steel

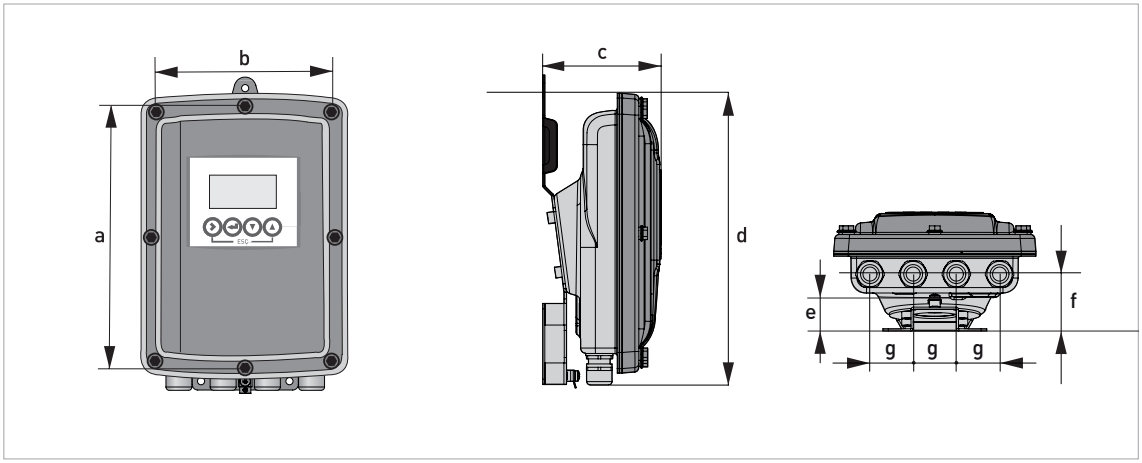

Figure 2-2: Dimensions stainless steel housing

Dimensions and weights in mm and kg

	Dimensions [mm]							Weight [kg]
	a	b	c	d	e	f	g	
Wall-mounted version	268	187	110	276	29	53	40	Approx. 3.5

Dimensions and weights in inch and lb

	Dimensions [inch]							Weight [lb]
	a	b	c	d	e	f	g	
Wall-mounted version	10.55	7.36	4.33	10.87	1.14	2.09	1.57	Approx. 7.2

2.2.3 Mounting plate die-cast aluminium

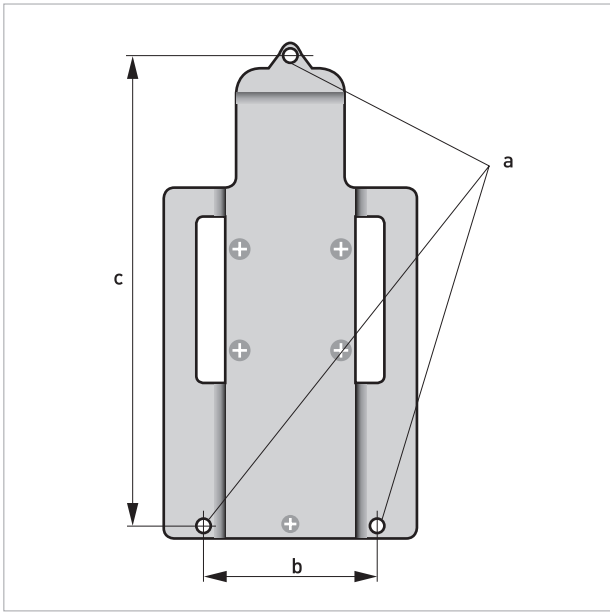

Figure 2-3: Dimensions mounting plate

Dimensions mounting plate

	[mm]	[inch]
a	Ø6.5	Ø0.26
b	87.2	3.4
c	241	9.5

2.2.4 Mounting plate stainless steel

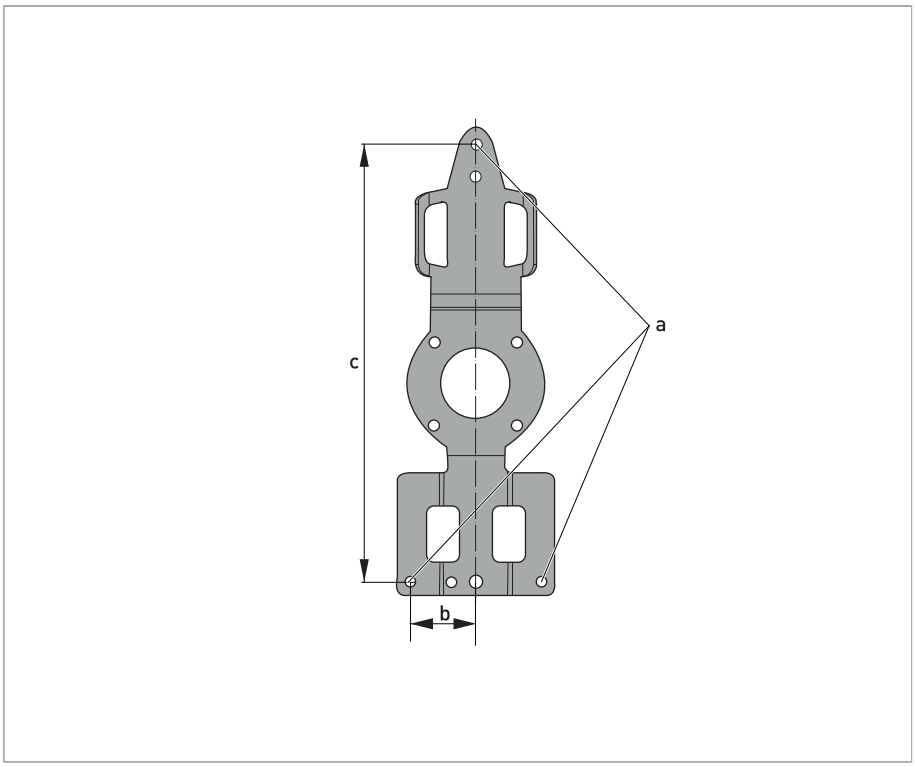

Figure 2-4: Dimensions mounting plate

Dimensions mounting plate

	[mm]	[inch]
a	Ø6.5	Ø0.26
b	40	1.6
c	268	10.5

3.1 General notes on installation

Inspect the packaging carefully for damages or signs of rough handling. Report damage to the carrier and to the local office of the manufacturer.

Do a check of the packing list to make sure that you have all the elements given in the order.

Look at the device nameplate to ensure that the device is delivered according to your order. Check for the correct supply voltage printed on the nameplate.

3.2 Intended use

Never install or operate the device in potentially explosive areas, it might cause an explosion that can result in fatal injuries.

This device is a Group 1, Class A device as specified within CISPR11:2009. It is intended for use in industrial environment. There may be potential difficulties in ensuring electromagnetic compatibility in other environments, due to conducted as well as radiated disturbances.

If the device is not used according to the operating conditions (refer to chapter "Technical data"), the intended protection could be affected.

In combination with the different sensors of the OPTISENS series the MAC 100 measures analytical parameters in water and waste water applications.

3.3 Storage and transport

Do not make any mechanical modifications to the device. This can result in the loss of proper functionality, as well as the rights under the device warranty.

- *Store and transport the device in a dry, dust-free environment.*
- *Avoid continuous direct sunlight*
- *Store and transport the device in an environment with a temperature between -40...+70° C / -40...+158° F.*
- *The original packing is designed to protect the equipment. It has to be used if the device is transported or sent back to the manufacturer to prevent damage of the device.*

3.4 Wall mounting

Never install or operate the device in potentially explosive areas, it might cause an explosion that can result in fatal injuries.

Always note the following items to ensure a proper and safe installation:

- *Make sure that there is adequate space to the sides.*
- *Protect the signal converter from direct sunlight and install a sun shade if necessary.*
- *Signal converters installed in control cabinets require adequate cooling, e.g. by fan or heat exchanger.*
- *Do not expose the signal converter to intense vibration.*
- *Use assembly materials and tools in compliance with the applicable occupational health and safety directives (assembly materials and tools are not part of the scope of delivery).*

Installation, assembly, start-up and maintenance may only be performed by appropriately trained personnel. The regional occupational health and safety directives must always be observed.

The mounting plate is fixed at the back side of the device in the delivery condition. The following drawings illustrate the proper mounting:

A mounting system with a minimum load force of 0.1 kN (for example FISCHER type UX10) suitable for the background has to be applied.

Wall mounting with plugs

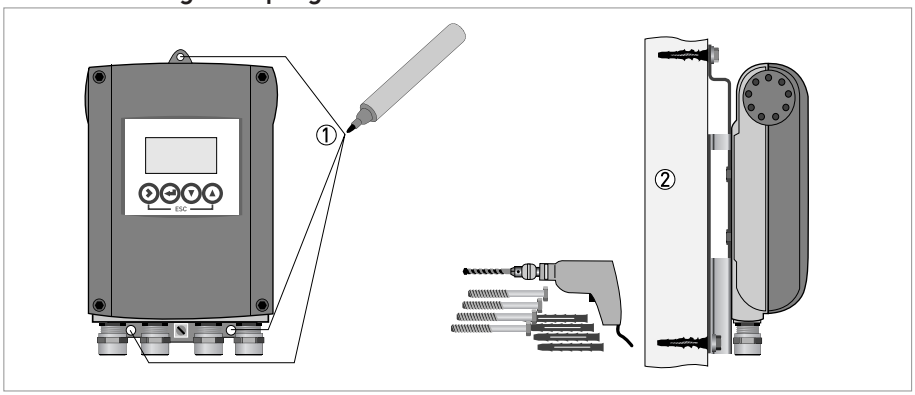

Figure 3-1: Mounting procedure to walls

- Note the drawing above and mark all drill holes with the help of a pen, e.g. a felt pen ①.
- Fasten the device securely to the wall with the help of drilling machine, plugs, screws and the mounting plate ②.

Wall mounting of multiple devices (Die-cast aluminium)

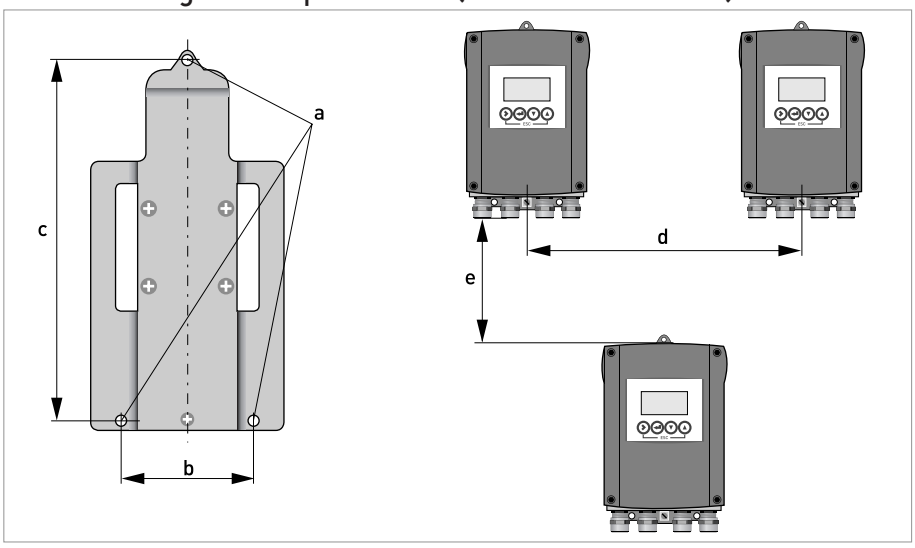

Figure 3-2: Dimensions and distances

	[mm]	["]
a	Ø6.5	Ø0.26
b	87.2	3.4
c	241	9.5
d	310	12.2
e	257	10.1

Wall mounting of multiple devices (Stainless steel)

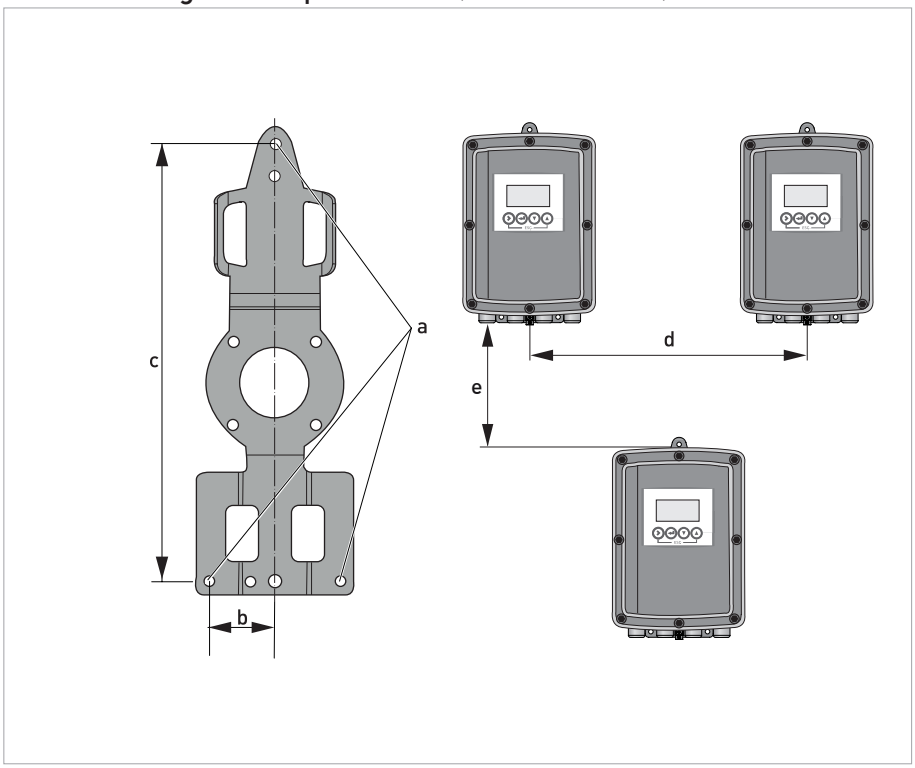

Figure 3-3: Dimensions and distances

	[mm]	[inch]
a	Ø6.5	Ø0.26
b	40	1.6
c	268	10.5
d	336	13.2
e	257	10.1

4.1 Safety instructions

All work on the electrical connections may only be carried out with the power disconnected. Take note of the voltage data on the nameplate!

Observe the national regulations for electrical installations!

For devices used in hazardous areas, additional safety notes apply; please refer to the Ex documentation.

Observe without fail the local occupational health and safety regulations. Any work done on the electrical components of the measuring device may only be carried out by properly trained specialists.

Look at the device nameplate to ensure that the device is delivered according to your order. Check for the correct supply voltage printed on the nameplate.

4.2 Used abbreviations

Abbreviation	Description
C_p	Control input passive
I_a	Current output active
I_{max}	Maximum current
I_{nom}	Nominal current
R_L	Load resistance
R plus number (e.g. R1)	Relay contact
P	Power
U_{ext}	External voltage source
$U_{ext, max}$	Maximum voltage of the external voltage source
$U_{int, nom}$	Nominal internal voltage
U_{on}	Voltage for triggering the control input (on)
U_{off}	Voltage for triggering the control input (off)

4.3 Important device-specific notes on electrical connection

Never install or operate the device in potentially explosive areas, it might cause an explosion that can result in fatal injuries!

The device must be grounded in accordance with regulations in order to protect personnel against electric shocks.

When installing and wiring the device, note the safety regulations of the current state of the art. Also note the following items to avoid fatal injuries, destruction or damage of the device or measuring errors:

- *De-energise the cables of the power supply before you start any installation works.*
- *Always install input and control cables divided from each other and from high voltage current cables.*
- *Assure that all cables of the inputs and current outputs are shielded. Connect the shieldings only to one side, e.g. to the device.*
- *When using relays, note that with inductive loads the interference must be suppressed.*
- *Assure that all electrical connection works are compliant with the VDE 0100 directive "Regulations for electrical power installations with line voltages up to 1000 V" or equivalent national regulations.*
- *Use suitable cable glands for the various electrical cables and suitable connecting cables for the field of application. The outer diameter of the connecting cables has to fit to the cable glands.*
- *The nominal voltage of the connecting cable has to fit to the operating voltage of the device.*

Assembly materials and tools are not part of the delivery. Use the assembly materials and tools in compliance with the applicable occupational health and safety directives.

4.4 Opening and closing the converter housing

Clean and grease all threads each time you open the housing. Use only resin-free and acid-free grease. Before closing the cover, ensure that the housing gasket is properly fitted, clean and undamaged.

4.4.1 Die-cast aluminium housing

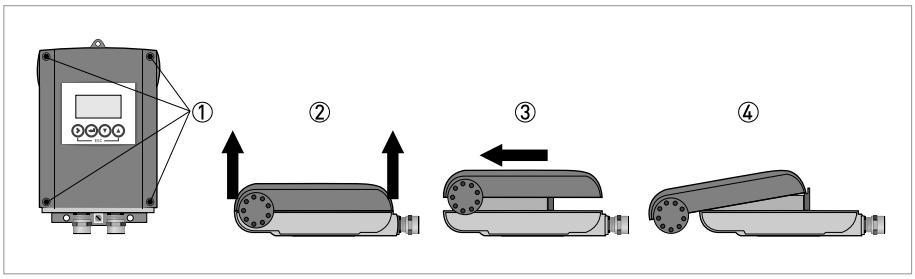

Figure 4-1: Opening the converter housing

- Loose the 4 screws ① with a crosstip screwdriver.
- Lift the housing at the top and bottom at the same time ②.
- Slide the housing cover backward ③.

➲ The housing cover is guided and held by the inside hinge; you have access to the terminal compartment now ④.

After completion of work close the converter housing.

4.4.2 Stainless steel converter housing

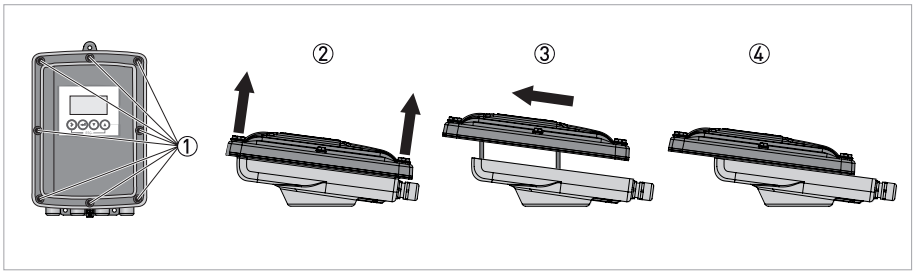

Figure 4-2: Opening the converter housing

- Loose the 8 hexagon screws ① with a 10 mm spanner socket.
- Lift the housing at the top and bottom at the same time ②.
- Slide the housing cover backward ③.

➲ The housing cover is guided and held by the inside hinge; you have access to the terminal compartment now ④.

After completion of work close the converter housing. To achieve a proper sealing of the device please tighten the screws in the following order with a torque of 5 Nm.

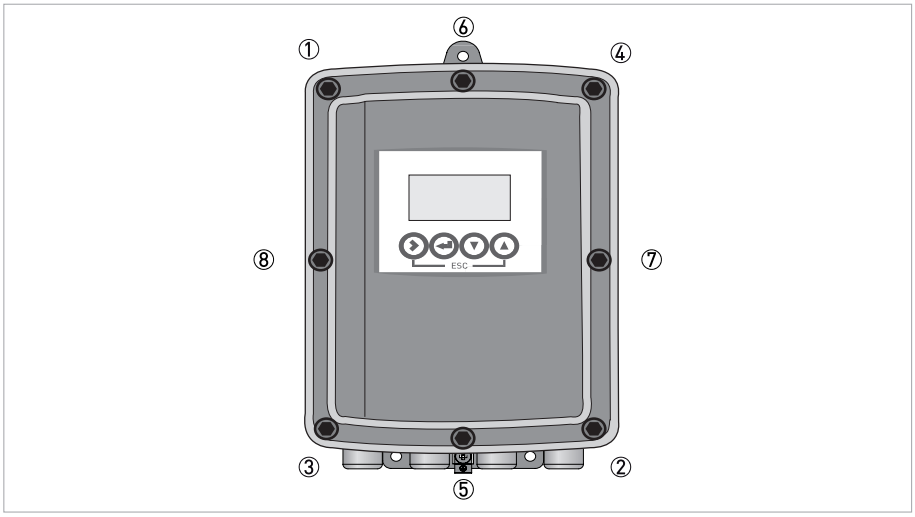

Figure 4-3: Tighten the screws

4.5 Overview of the terminal compartment

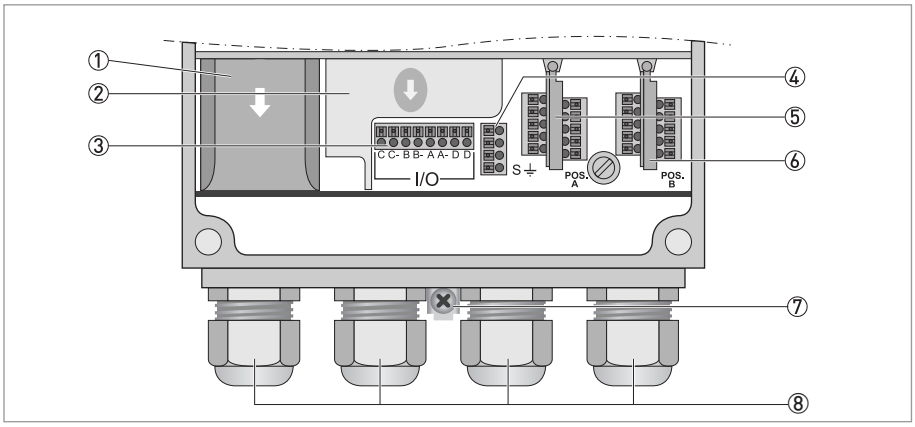

① Cover of power supply terminal
② Cover of relay outputs terminal
③ Current output terminal
④ Shield terminals
⑤ Terminals for sensor input A
⑥ Terminals for sensor input B
⑦ Possibility to connect a functional earth (only relevant for 24 V version)
⑧ Cable glands

4.6 Connecting the signal cables

The cable glands installed by the manufacturer are designed for a cable diameter of 8 to 13 mm. If you are using cables with a larger diameter, you must replace the manufacturer's cable glands with suitable ones.

For all information concerning the signal cables of the used sensor(s) and their connection refer to the relevant sensor handbook(s).

4.7 Connecting the power supply

The device must be grounded in accordance with regulations in order to protect personnel against electric shocks.

Never install or operate the device in potentially explosive areas, it might cause an explosion that can result in fatal injuries!

When connecting the power supply, always note the safety regulations of the current state of the art. Also note the following items to avoid fatal injuries, destruction or damage of the device or measuring errors:

- *De-energise the cables of the power supply before you start any installation works!*
- *Always keep the housing of the device well closed if you do not perform any installation works. The function of the housing is to protect the electronic equipment from dust and moisture.*
- *Assure that there is a fuse protection for the infeed power circuit ($I_{nom} \leq 16$ A) and a disconnecting device (switch, circuit breaker) to isolate the signal converter.*
- *Check the nameplate and assure that the power supply meets the voltage and frequency of the device. You can operate the device in the range of 100...230 VAC with a tolerance of -15/+10% while 240 VAC +5% is included in the tolerance range. The 24 VAC/DC version can be operated 24 VDC with a tolerance of -25/+30% or with 24 VAC with a tolerance of+15%/-10%. A power supply outside these specifications may destroy the device!*
- *Assure for 100...230 VAC version that the protective earth conductor (PE) is longer than the L- and N-conductor.*

The manufacturer has designed all creepage distances and clearances according to VDE 0110 and IEC 60664 for pollution degree 2. The power supply circuits fulfil the overvoltage category III and the output circuits fulfil the overvoltage category II.

Before you start to connect the power supply cables, note the following drawing with the function of the terminals:

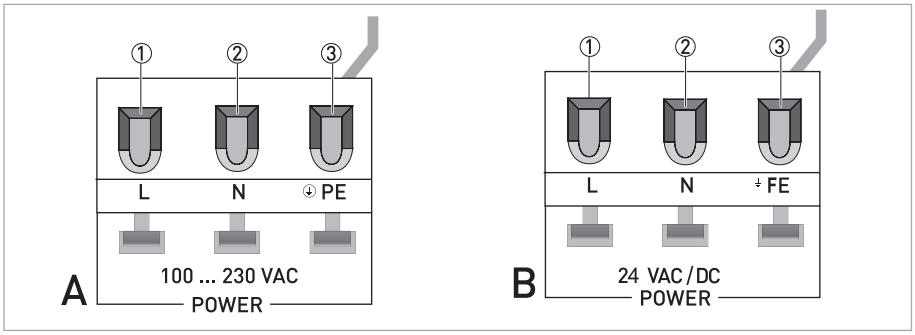

Figure 4-4: A - 100...230 VAC / B- 24 VAC/DC

① Live (L)
② Neutral (N)
③ Protective Earth (PE) or Functional Earth (FE)

Afterwards connect the power supply cables accordingly:

The manufacturer strongly recommends to use a slotted screwdriver with a tip of 3.5 x 0.5 mm / 0.14 x 0.02" to push down the lever! Otherwise you could damage the lever.

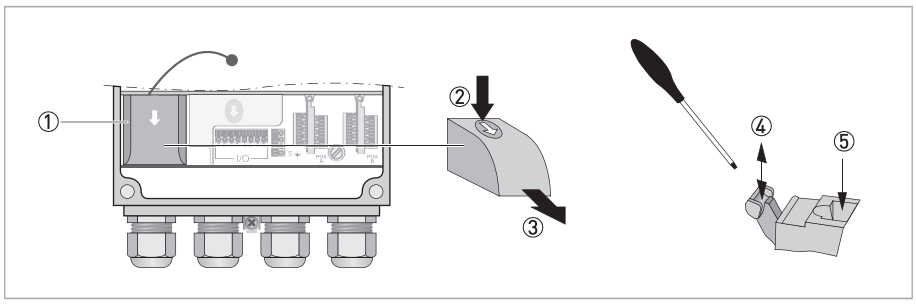

- De-energise the power supply cables with the help of a disconnecting device (switch, circuit breaker)!
- Open the converter housing (refer to *Opening and closing the converter housing* on page 22).
- Remove the cover of the power supply terminal ① by pressing it down and pulling forwards at the same time ② and ③, be careful and do not disrupt the retaining band (it prevents the cover from getting lost)!
- Use a slotted screwdriver with a tip of 3.5 x 0.5 mm / 0.14 x 0.02" to push down the lever, connect the wires to the terminals and pull up the levers again ④ and ⑤.
- Refasten the cover of the power supply terminal, close the converter housing and tighten all screws of the housing.

4.8 Description and properties of the outputs and the input

4.8.1 Current output

Never install or operate the device in potentially explosive areas, it might cause an explosion that can result in fatal injuries.

For further information refer to the connection diagrams and the technical data table.

- All outputs are electrically isolated from each other and from all other circuits.
- All operating data and functions can be adjusted.
- Output data: measuring results of the sensor inputs A and B inclusive one temperature value.
- Active mode: output range 0(4)...20 mA, load resistance $R_L \leq 550\ \Omega$ at $I_{max} \leq 22$ mA, $U_{int,nom}$ = 15 VDC.
- Self-monitoring: interruption or load resistance too high in the current output loop.
- Error signalling possible via alarm relays, error indication on LC display.
- Current value error detection can be adjusted.

4.8.2 Relay outputs

Never install or operate the device in potentially explosive areas, it might cause an explosion that can result in fatal injuries.

For further information refer to the diagrams on page 29 and *on page 30* as well as the technical data table *on page 8*.

The device has three electro-mechanical relays that can work as alarm relays or limit switches:

- The relay contacts are electrically isolated from each other and from all other circuits.
- The output stages of the status outputs / limit switches behave like relay contacts.
- Possible conditions: NO (normally open) or NC (normally closed).
- Contact ratings:
  - Relays for low voltages: U ≤ 30 VDC, I ≤ 1 A, resistive load (PELV / SELV) or U ≤ 50 VAC, I ≤ 4 A, resistive load (PELV / SELV)
  - Relays for high voltages: U = 100...230 VAC, I ≤ 4 A, max. 1000 VA resistive load
- The contact circuits have to be either PELV / SELV circuits or hazardous voltage circuits.

4.8.3 Control input (passive)

Pay attention to the maximum voltage and current values which can be applied to the control input! Applying power outside the allowed range can destroy or damage the device!

The factory default is a disabled control input!

The passive control input can trigger different events in the converter from outside. It is engaged via applying a voltage of U_{on} > 8 VDC and disengaged via applying a voltage of U_{off} < 2.5 VDC. The properties in detail are the following:

- Passive, not polarity sensitive
- Condition "off": $U_{off} \leq 2.5$ VDC with I_{nom} = 0.4 mA
- Condition "on": $U_{on} \geq 8$ VDC with I_{nom} = 2.8 mA
- $U_{ext, max} \leq 32$ VDC
- I_{nom} = 6.5 mA with U_{ext} = 24 VDC
- I_{nom} = 8.2 mA with U_{ext} = 32 VDC

For instance the control input can work together with a flow monitor that monitors the sample flow and gives a signal if the flow drops below a certain threshold. If in this case the control input has the setting "flow control", it triggers an "F application error" (this error indicates that the application-dependent fault, but device is okay). For more information refer to the table of the error category "Out of specification" in the manual.

There are other purposes for the usage of the control input. For detailed information refer to the function C3.5 and especially C3.5.1 in the corresponding function table of the manual.

4.9 Connection diagrams of the outputs and the input

4.9.1 Important notes

Never install or operate the device in potentially explosive areas, it might cause an explosion that can result in fatal injuries.

- *All groups are electrically isolated from each other and from all other input and output circuits.*
- *Active operating mode: the signal converter supplies the power for operation (activation) of the subsequent devices, observe max. operating data.*
- *Terminals that are not used must not have any conductive connection to other electrically conductive parts.*

4.9.2 Description of electrical symbols

Symbol	Description
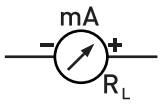	mA meter, 0...20 mA or 4...20 mA and other, R_L is the internal resistance of the measuring point including the cable resistance
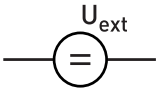	DC voltage source (U_{ext}), external power supply, any connection polarity
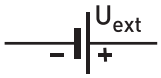	DC voltage source (U_{ext}), observe connection polarity according to connection diagrams
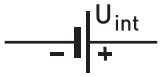	Internal DC voltage source
	Controlled internal power source in the device
	Button, NO contact or similar

4.9.3 Block diagram

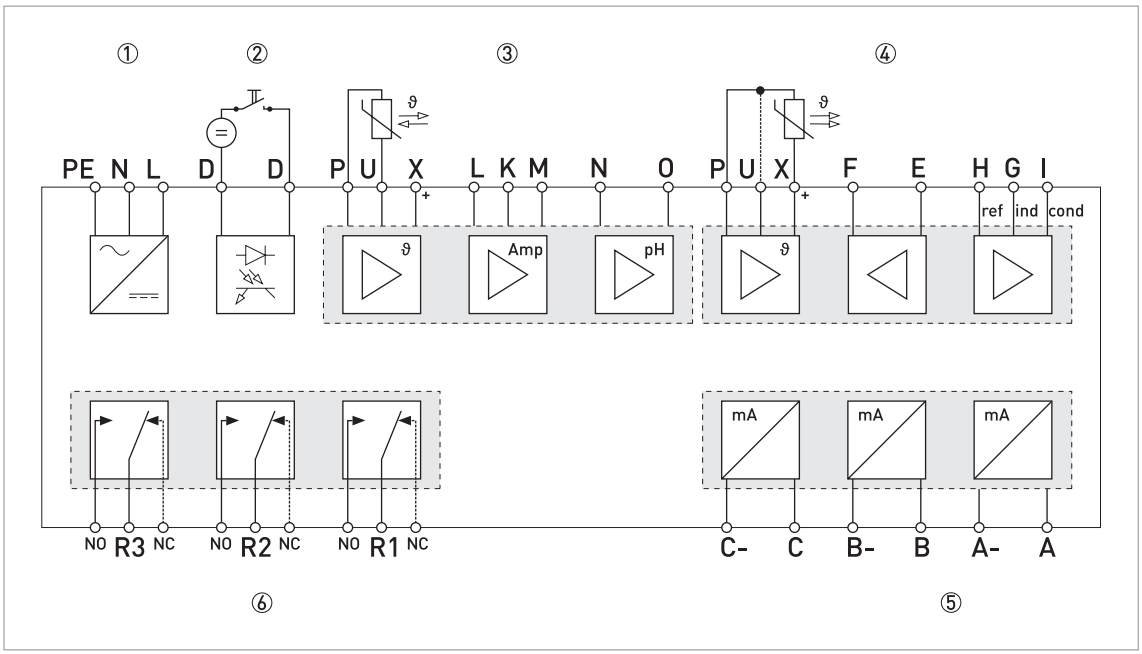

Figure 4-5: Block diagram

① Power supply (100...230 VAC or 24 VAC/DC)
② Control input (non-polarised), 8...32 VDC
③ Sensor input B, refer to sensor handbook (the terminals P, U and X show an example with a NTC resistor)
④ Sensor input A, refer to sensor handbook (the terminals P, U and X show an example with a Pt100/1000 resistor)
⑤ Current outputs A, B and C
⑥ Relay outputs R1, R2 and R3

4.9.4 Current output (active)

To avoid damage or destruction of the device always note the following items:

- *Observe the connection polarity!*
- *Note the properties of the current output. For further information refer to Current output on page 26.*

Connection diagram of current output (active)

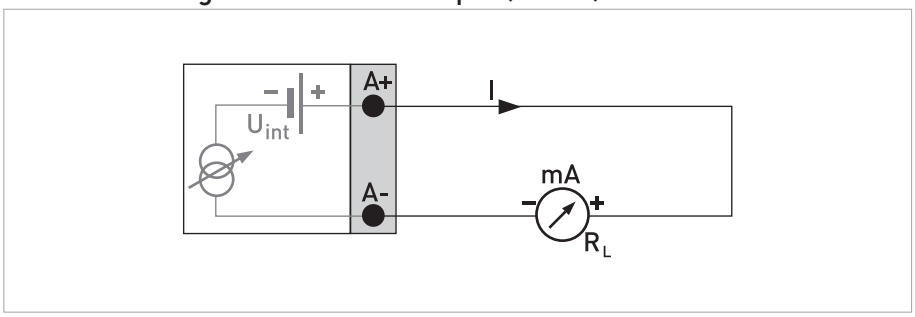

Figure 4-6: Current output (active)

4.9.5 Relay outputs

To avoid damage or destruction of the device always note the properties of the relay outputs, further information on page 26.

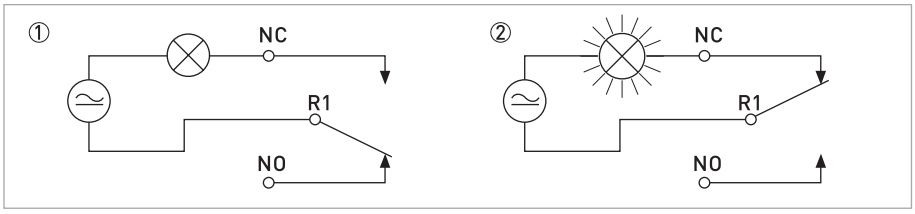

Figure 4-7: Example: different conditions of a relay output

① Normal operation: device in operation and no current error message, indicator lamp off, relay contact open.
② Alarm condition: error message occurs, indicator lamp on, device de-energised or with malfunction, relay contact closed.

4.9.6 Control input

To avoid damage or destruction of the device always note the properties of the control input, further information on page 27.

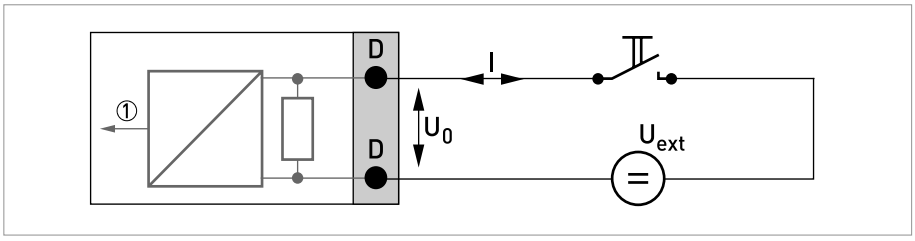

Figure 4-8: Control input

① Signal

4.10 Electrical connection of the outputs and the input

All work on the electrical connections may only be carried out with the power disconnected. Take note of the voltage data on the nameplate!

Assembly materials and tools are not part of the delivery. Use the assembly materials and tools in compliance with the applicable occupational health and safety directives.

- Open the housing cover (refer to *Opening and closing the converter housing* on page 22).
- Push the prepared cables through the cable entries and connect the necessary conductors.
- Connect the shield.
- Tighten the screw connection of the cable entry securely.
- Seal all cable entries that are not needed with a plug.
- Close the housing cover (refer to *Opening and closing the converter housing* on page 22).

Ensure that the housing gasket is properly fitted, clean and undamaged.

4.10.1 Connecting the current outputs

Use the correct cable gland. For further information refer to manual of this device.

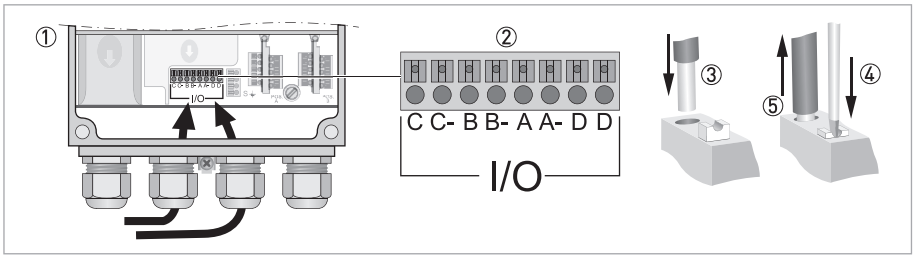

- Conduct the cables with prefabricated shielding through the correct cable glands ① and ②.
- Insert the cable into the terminal ③.
- To remove the cable push the lever down with a suitable tool ④ and pull the cable out of the terminal ⑤.

4.10.2 Connecting the relay outputs

To avoid dangerous voltages, the switching voltage for the relay contacts must fulfill one of the following conditions: it must either originate from the same network as the signal converter power supply including pre-fuse and separator (see Section 4.6) or come from a SELV or PELV network. When installing, always comply with the prevailing national and international regulations and standards.

If you want to switch inductive loads (even relays or protection coils), you always have to dejam them! Otherwise there may occur interferences with the measuring signal. Also note the following items:

- *If you use DC voltage, dejam the relay coil with a free-wheeling diode; refer to the following table and the following drawing "Interference suppression"!*
- *If dejamming is not possible, you have to assure that the relay contact is protected by a RC protection circuit! Also refer to the following table.*
- *If you use potential-free relay outputs, assure that a suitable shut-off device and a pre-fuse is installed in the feed line on site.*
- *When switching inductive loads, the manufacturer recommends a protective circuit to avoid unnecessarily high contact burn on the relay contact!*

In delivery condition, the relay contacts are also suitable for low signal currents (from approx. 1 mA). Please note that the gold plating burns off during the switching operation when larger currents are used (from approx. 100 mA). Afterwards, the relays can no longer reliably switch small currents!

AC voltage: required capacitors and resistances for dejamming

Current up to	Capacitor	Resistor
60 mA	10 nF / 260 V	390 Ω / 2 W
70 mA	47 nF / 260 V	22 Ω / 2 W
150 mA	100 nF / 260 V	47 Ω / 2 W
1.0 A	220 nF / 260 V	47 Ω / 2 W

Interference suppression (A = AC, B = DC)

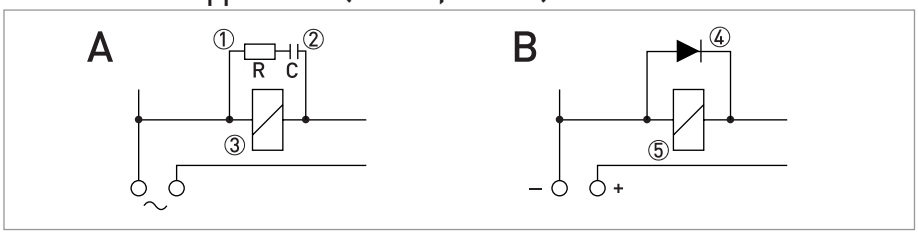

Figure 4-9: Interference suppression

① Resistor, R = 47...390 Ω, see table before
② Capacitor, C = 10...220 nF, see table before (e.g. Siemens MKC B 81 921)
③ Relay coil
④ Free-wheeling diode
⑤ Relay coil

Required cable properties

- Maximum wire cross section: 1.5 mm^2 / 0.06 square inch
- Minimum stripping length for wires: 8 mm / 0.31"

Note the following procedure, remove the cover and connect the cables accordingly:

Step 1: removing the cover

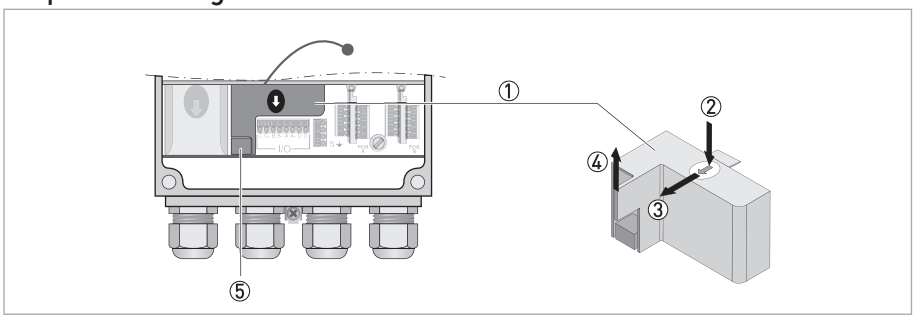

Figure 4-10: Removing the cover

The screw under the cover ⑤ is not to be used as a cable connection. Do not loosen or remove the cover or the screw!

- Start to remove the cover of the relay outputs ① by pressing it down ②.
- Pull the cover forward ③, then upward out of the clip and remove it ② and ④.
- Remove the cover of the earth terminal by pulling it upward ⑤.

➲ You see the 10-pin terminal block which is fitted with a connected bridge.

Step 2: connecting the cables

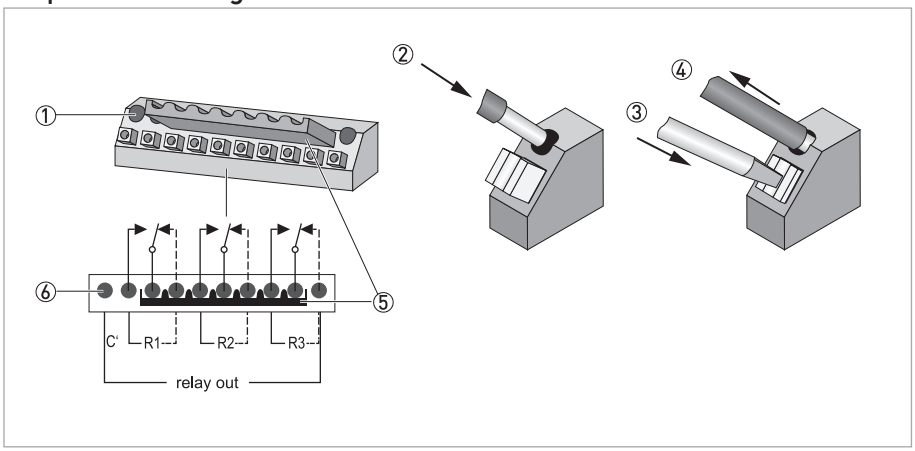

Figure 4-11: Connecting the cables

- Connect the cables to the single relay terminals ① as described in the previous drawing ②, note the required cable properties!
- If you want to release a cable from the relay terminals, first unlock the locking device ③ with a suitable tool and pull out the cable ④.

If a switching voltage is applied to connection "C" ⑥ in the previous drawing), relay contacts R1, R2 and R3 are supplied in parallel with the help of the link plug ⑤. This allows the voltage switched from the relays to be passed on. You can remove the bridge if this supply is not needed.

- After you have connected all cables, refasten the cover of the relay outputs.
- Close the converter housing and tighten all screws of the housing. (For further information refer to *Opening and closing the converter housing* on page 22).

5.1 Order code

The characters of the order code highlighted in light grey describe the standard.

VGA K 4	**Type / housing converter**						
	1	MAC 100 (Die cast aluminium)					
	2	MAC 100 (Stainless steel)					
		Sensor input A					
		1	Conductive conductivity				
		2	Inductive conductivity				
		3	pH / ORP (pH-preconfigured)				
		4	Cl_2 0.03...5 mg/l				
		5	ClO_2 0.05...5 mg/l				
		6	O_3 0.05...5 mg/l				
		8	Cl_2 0.03...20 mg/l				
		A	pH / ORP (ORP-preconfigured)				
		M	DO for OPTISENS ODO 2000 (optical DO)				
		N	TUR for OPTISENS TUR 2000 (turbidity)				
		P	DO for OPTISENS ADO 2000 (amperometric DO)				
		R	TSS for OPTISENS ADO 2000 (total suspended solids)				
			Sensor input B				
			0	None			
			1	Conductive conductivity			
			2	Inductive conductivity			
			3	pH / ORP (pH-preconfigured)			
			A	pH / ORP (ORP-preconfigured)			
				Signal output			
				3	3 x 0/4...20 mA (active)		
					Approvals		
					0	None	
						Relays	
						0	None
						3	3 x free programmable (mechanical); required for OPTISENS ADO 2000
VGA K 4							Continued on next page

							Operation language						
							1	English					
							2	German					
							3	French					
							4	Spanish					
								Power supply					
								1	100...230 VAC				
								2	24 VAC/DC				
									Options				
									1	Incl. wall mounting			
										Documentation			
										0	None		
										1	English		
										2	German		
										3	French		
											Cable gland		
											1	4 x M20 (Polyamid)	
											2	4 x 1/2 NPT (brass)	
											5	4 x M20 (Stainless steel))	
												Supplementary equipment	
												0	None
												1	ASR Automatic Sensor Cleaning (only for Cl_2, ClO_2, O_3)
VGA K 4													Complete order code

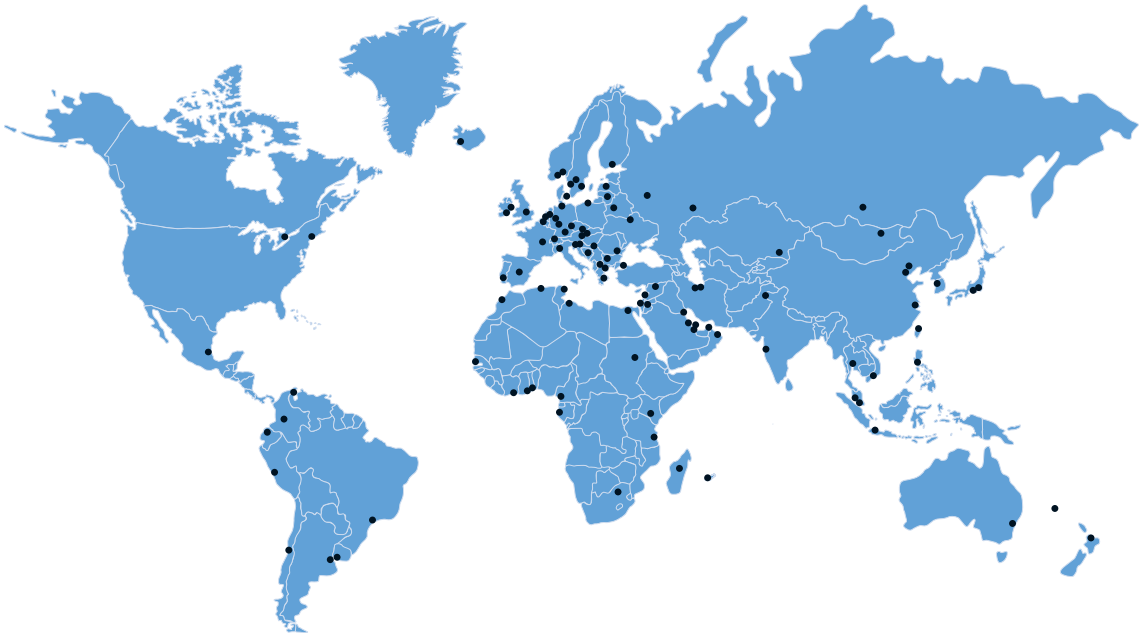

KROHNE – Process instrumentation and measurement solutions

- Flow
- Level
- Temperature
- Pressure
- Process Analysis
- Services

Head Office KROHNE Messtechnik GmbH
Ludwig-Krohne-Str. 5
47058 Duisburg (Germany)
Tel.: +49 203 301 0
Fax: +49 203 301 10389
info@krohne.com

The current list of all KROHNE contacts and addresses can be found at:
www.krohne.com

© KROHNE 10/2016 - 4001957402 - TD MAC 100 R02 en - Subject to change without notice.