GA24 Handbook

Variable area flowmeter

© KROHNE 08/2015 - 4001229901 - MA GA24 R01 en

KROHNE

IMPRINT

All rights reserved. It is prohibited to reproduce this documentation, or any part thereof, without the prior written authorisation of KROHNE Messtechnik GmbH.

Subject to change without notice.

Copyright 2015 by
KROHNE Messtechnik GmbH - Ludwig-Krohne-Str. 5 - 47058 Duisburg (Germany)

1 Safety instructions 5

1.1 Intended use 5
1.2 Certifications 5
1.3 Safety instructions from the manufacturer 6
1.3.1 Copyright and data protection 6
1.3.2 Disclaimer 6
1.3.3 Product liability and warranty 7
1.3.4 Information concerning the documentation 7
1.3.5 Warnings and symbols used 8
1.4 Safety instructions for the operator 8

2 Device description 9

2.1 Scope of delivery 9
2.2 Nameplate 10
2.3 Description code 10

3 Installation 11

3.1 General notes on installation 11
3.2 Storage 11
3.3 Installation condtitions 11
3.4 Transport locks 11

4 Electrical connections 12

4.1 Safety instructions 12
4.2 Limit switches GA24 12
4.2.1 MS14 limit switch connection 13
4.2.2 TG21 limit switch connection 13
4.3 Limit switch settings 14
4.3.1 Limit switch settings MS14 14
4.3.2 Limit switch settings TG21 14
4.4 Limit switch function reversal 15
4.4.1 Limit switch function reversal MS14 15
4.4.2 Limit switch function reversal TG21 15

5 Service 16

5.1 Maintenance 16
5.2 Spare parts availability 16
5.3 Availability of services 16
5.4 Returning the device to the manufacturer 17
5.4.1 General information 17
5.4.2 Form (for copying) to accompany a returned device 18
5.5 Disposal 18

6 Technical data 19

6.1 Operating principle 19
6.2 Technical data 20
6.3 Dimensions and weights 23
6.4 Measuring ranges 24

7 Notes 26

1.1 Intended use

CAUTION!
Responsibility for the use of the measuring devices with regard to suitability, intended use and corrosion resistance of the used materials against the measured fluid lies solely with the operator.

INFORMATION!
This device is a Group 1, Class A device as specified within CISPR11:2009. It is intended for use in industrial environment. There may be potential difficulties in ensuring electromagnetic compatibility in other environments, due to conducted as well as radiated disturbances.

INFORMATION!
The manufacturer is not liable for any damage resulting from improper use or use for other than the intended purpose.

The variable area flowmeters are suitable for measuring gases and liquids.

The devices are particularly suitable for the measurement of:

- Liquids
- Hydrocarbons
- Water
- Chemicals with low corrosiveness
- Industrial gases

DANGER!
For devices used in hazardous areas, additional safety notes apply; please refer to the Ex documentation.

CAUTION!
Do not use any abrasive or highly viscous media.

1.2 Certifications

The device fulfils the statutory requirements of the following EC directives:

- Pressure Equipment Directive 97/23/EC
- Devices with contacts: EMC Directive 2004/108/EC
- Devices for use in hazardous areas: ATEX Directive 94/9/EC

The manufacturer certifies successful testing of the product by applying the CE marking.

1.3 Safety instructions from the manufacturer

1.3.1 Copyright and data protection

The contents of this document have been created with great care. Nevertheless, we provide no guarantee that the contents are correct, complete or up-to-date.

The contents and works in this document are subject to copyright. Contributions from third parties are identified as such. Reproduction, processing, dissemination and any type of use beyond what is permitted under copyright requires written authorisation from the respective author and/or the manufacturer.

The manufacturer tries always to observe the copyrights of others, and to draw on works created in-house or works in the public domain.

The collection of personal data (such as names, street addresses or e-mail addresses) in the manufacturer's documents is always on a voluntary basis whenever possible. Whenever feasible, it is always possible to make use of the offerings and services without providing any personal data.

We draw your attention to the fact that data transmission over the Internet (e.g. when communicating by e-mail) may involve gaps in security. It is not possible to protect such data completely against access by third parties.

We hereby expressly prohibit the use of the contact data published as part of our duty to publish an imprint for the purpose of sending us any advertising or informational materials that we have not expressly requested.

1.3.2 Disclaimer

The manufacturer will not be liable for any damage of any kind by using its product, including, but not limited to direct, indirect or incidental and consequential damages.

This disclaimer does not apply in case the manufacturer has acted on purpose or with gross negligence. In the event any applicable law does not allow such limitations on implied warranties or the exclusion of limitation of certain damages, you may, if such law applies to you, not be subject to some or all of the above disclaimer, exclusions or limitations.

Any product purchased from the manufacturer is warranted in accordance with the relevant product documentation and our Terms and Conditions of Sale.

The manufacturer reserves the right to alter the content of its documents, including this disclaimer in any way, at any time, for any reason, without prior notification, and will not be liable in any way for possible consequences of such changes.

1.3.3 Product liability and warranty

The operator shall bear responsibility for the suitability of the device for the specific purpose. The manufacturer accepts no liability for the consequences of misuse by the operator. Improper installation or operation of the devices (systems) will cause the warranty to be void. The respective "Standard Terms and Conditions" which form the basis for the sales contract shall also apply.

1.3.4 Information concerning the documentation

To prevent any injury to the user or damage to the device it is essential that you read the information in this document and observe applicable national standards, safety requirements and accident prevention regulations.

If this document is not in your native language and if you have any problems understanding the text, we advise you to contact your local office for assistance. The manufacturer can not accept responsibility for any damage or injury caused by misunderstanding of the information in this document.

This document is provided to help you establish operating conditions, which will permit safe and efficient use of this device. Special considerations and precautions are also described in the document, which appear in the form of icons as shown below.

1.3.5 Warnings and symbols used

Safety warnings are indicated by the following symbols.

DANGER!
This warning refers to the immediate danger when working with electricity.

DANGER!
This warning refers to the immediate danger of burns caused by heat or hot surfaces.

DANGER!
This warning refers to the immediate danger when using this device in a hazardous atmosphere.

DANGER!
These warnings must be observed without fail. Even partial disregard of this warning can lead to serious health problems and even death. There is also the risk of seriously damaging the device or parts of the operator's plant.

WARNING!
Disregarding this safety warning, even if only in part, poses the risk of serious health problems. There is also the risk of damaging the device or parts of the operator's plant.

CAUTION!
Disregarding these instructions can result in damage to the device or to parts of the operator's plant.

INFORMATION!
These instructions contain important information for the handling of the device.

LEGAL NOTICE!
This note contains information on statutory directives and standards.

- HANDLING
  This symbol designates all instructions for actions to be carried out by the operator in the specified sequence.

➲ RESULT
This symbol refers to all important consequences of the previous actions.

1.4 Safety instructions for the operator

WARNING!
In general, devices from the manufacturer may only be installed, commissioned, operated and maintained by properly trained and authorized personnel.
This document is provided to help you establish operating conditions, which will permit safe and efficient use of this device.

2.1 Scope of delivery

INFORMATION!
Inspect the packaging carefully for damages or signs of rough handling. Report damage to the carrier and to the local office of the manufacturer.

INFORMATION!
Do a check of the packing list to make sure that you have all the elements given in the order.

INFORMATION!
Look at the device nameplate to ensure that the device is delivered according to your order. Check for the correct supply voltage printed on the nameplate.

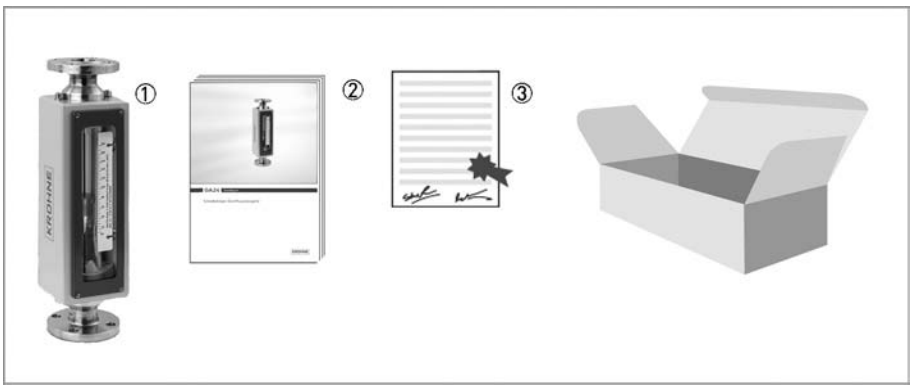

Figure 2-1: Scope of delivery

① Measuring device in ordered version
② Manual
③ Certificates, calibration report (supplied to order only)

2.2 Nameplate

INFORMATION!
Look at the device nameplate to ensure that the device is delivered according to your order. Check for the correct supply voltage printed on the nameplate.

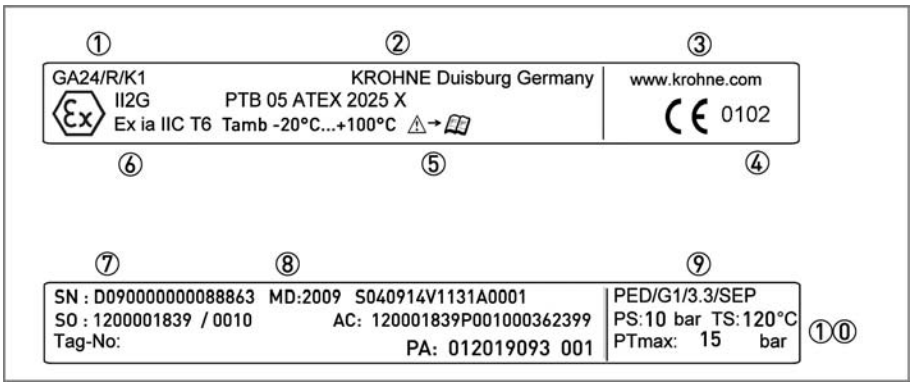

① Device type
② Manufacturer
③ Internet site
④ Notified ATEX body
⑤ Note manual
⑥ Ex data
⑦ Serial Number
⑧ Year of manufacture
⑨ PED data
①⓪ Sizing data: temperature & pressure

Additional markings on the measuring device

- SO - sales order / item
- Tag-No - Measuring point identifier
- PA - KROHNE order
- AC - article code

2.3 Description code

The description code* GA24 consists of the following elements:

① Material of connection
R - stainless steel
PTFE - stainless steel with PTFE lining

② Limit switch
K1 - One limit switch
K2 - Two limit switches

* positions which are not needed are omitted (no blank positions)

3.1 General notes on installation

INFORMATION!
Inspect the packaging carefully for damages or signs of rough handling. Report damage to the carrier and to the local office of the manufacturer.

INFORMATION!
Do a check of the packing list to make sure that you have all the elements given in the order.

INFORMATION!
Look at the device nameplate to ensure that the device is delivered according to your order. Check for the correct supply voltage printed on the nameplate.

3.2 Storage

- Store the device in a dry and dust-free location.
- Avoid lasting direct exposure to the sun.
- Store the device in its original packing.
- The permissible storage temperature for standard devices is -40...+80°C / -40...+176°F.

3.3 Installation condtitions

CAUTION!
When installing the device in the piping, the following points must be observed:
- *The variable area flowmeter must be installed vertically (measuring principle). Flow direction from bottom to top. For installation recommendations please refer also to VDI/VDE 3513 Sheet 3.*
- *Before connecting, blow or flush out the pipes leading to the device.*
- *Pipes for gas flow need to be dried before the device is installed.*
- *Use connectors suitable for the particular device version.*
- *Align the pipes centrically with the connection bores on the measuring device so they are free of stresses.*
- *If necessary, support the pipeline to reduce vibrations being transmitted to the measuring device.*
- *Do not lay signal cables directly next to cables for the power supply.*

3.4 Transport locks

A plastic rod is fitted to secure the float during transportation. This must be removed prior to starting up.

Remove the protective cover on the top flange and the rod lock from the glass.

4.1 Safety instructions

DANGER!
All work on the electrical connections may only be carried out with the power disconnected. Take note of the voltage data on the nameplate!

DANGER!
Observe the national regulations for electrical installations!

DANGER!
For devices used in hazardous areas, additional safety notes apply; please refer to the Ex documentation.

WARNING!
Observe without fail the local occupational health and safety regulations. Any work done on the electrical components of the measuring device may only be carried out by properly trained specialists.

INFORMATION!
Look at the device nameplate to ensure that the device is delivered according to your order. Check for the correct supply voltage printed on the nameplate.

4.2 Limit switches GA24

The flowmeters GA24 can be equipped with a maximum of two bistable limit switches.

Bistable function: Stable switching when passing through the switching point

Use, selection and function - see Technical Data

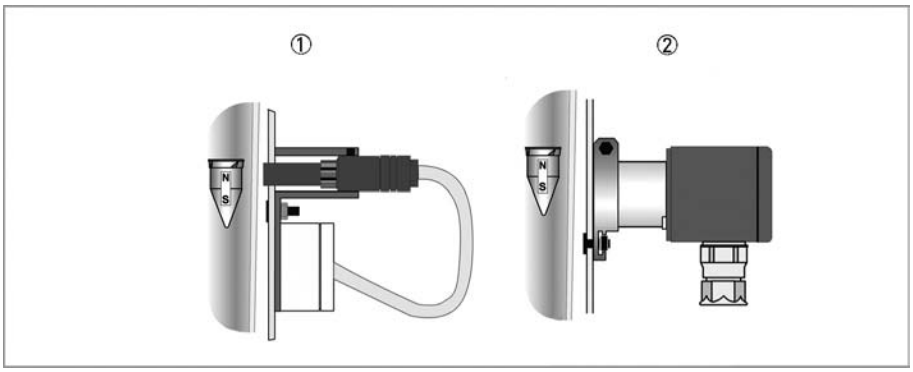

Figure 4-1: Types of limit switch

① MS 14/I - floating, bistable reed contact
② TG21 - bistable, with integrated switching lug and slotted proximity switch

4.2.1 MS14 limit switch connection

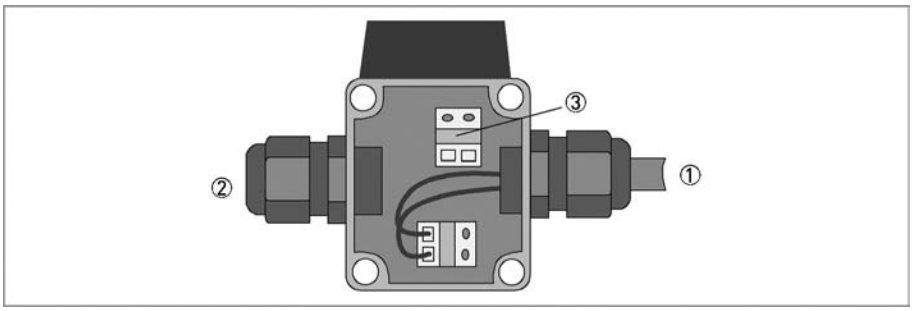

Figure 4-2: Connection limit switch type MS14

① Connection Reed-switch
② Connection Receiver device
③ Terminal connection (potential-free)

The switching function requires a float with integrated magnet.

4.2.2 TG21 limit switch connection

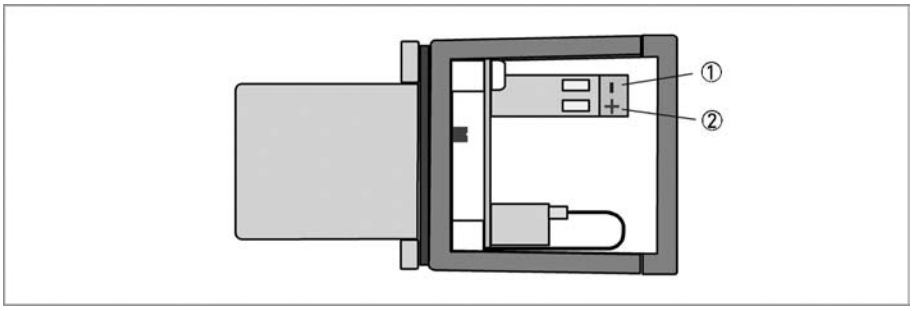

Figure 4-3: Connection limit switch type TG21

① Terminal -
② Terminal +

The TG 21 is adapted for switch amplifiers with an intrinsically safe circuit as per DIN EN 50227 NAMUR.

The TG 21 includes an inductive slotted proximity switch with bistable switching characteristics. The slotted proximity switch is activated by the immersion of an aluminum lug. The magnet of the immersion lug is moved by the magnet in the float.
The switching function requires a float with integrated magnet.

4.3 Limit switch settings

4.3.1 Limit switch settings MS14

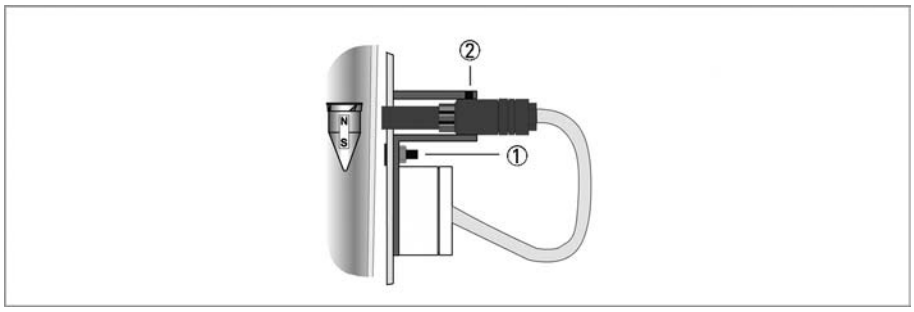

- Untighten bracket screw ① and set switching position
- Secure bracket screw ①

The distance between the limit switch and the casing is factory set with clamp screw ② so that the limit switch touches the glass taper at the maximum switching point.

The limit switch must be rotated 180° to reach the lower range of the scale.

4.3.2 Limit switch settings TG21

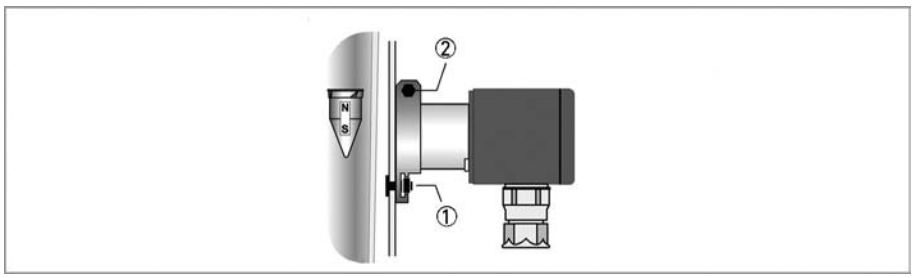

- Untighten bracket screw ① and set switching position
- Secure bracket screw ①

The distance between the limit switch and the casing is factory set at approx. 1 mm (0.039") with the clamping screw ②.

4.4 Limit switch function reversal

4.4.1 Limit switch function reversal MS14

The contact function can be changed by reconnecting the reed cartridge screwed into the cartridge housing:

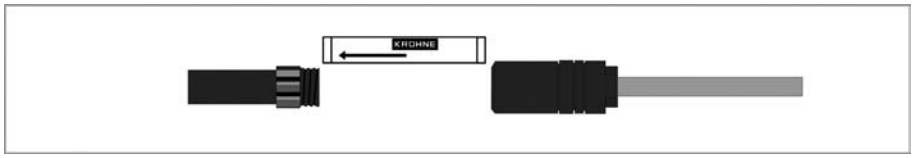

- Closing as flow increases:Arrow on reed cartridge points towards measuring glass.
- Closing as flow decreases:Arrow on reed cartridge points away from measuring glass.

4.4.2 Limit switch function reversal TG21

The contact function can be changed from normally open to normally closed by moving the position of the slotted proximity switch ③.

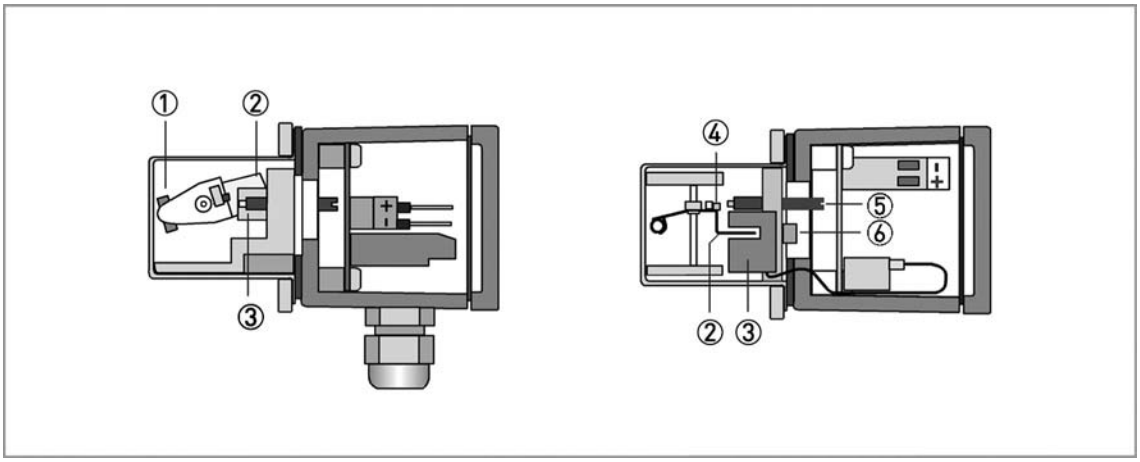

① Magnet
② Contact vane
③ Slot sensor
④ Counter-magnet
⑤ Grub screw
⑥ Detaching screw slot sensor

Once the screw ⑥ has been undone, the slotted proximity switch ③ can be moved to the other end position.
If there is the possibility of vibrations triggering an improper switching operation, the strength of the force closure between the adjustment magnet and counter magnet ④ can be adjusted on the immersion lug ② using the grub screw ⑤.
The switching reproducibility is < 3% of the final measuring range value and is affected by the strength of the force closure.

5.1 Maintenance

The flowmeter should be checked for signs of dirt, corrosion, mechanical wear and damage to the measuring glass during routine maintenance of the system and pipelines. We advise that inspections be carried out at least once per year.

CAUTION!
Pressurized pipes have to be depressurized before removing the device.
Empty pipes as completely as possible.
In the case of devices used for measuring aggressive or hazardous media, appropriate safety precautions must be taken with regard to residual liquids in the measuring unit.
Only the connecting couplings of the pipeline may be undone.
Always use new seals when fitting the measuring device in the pipe.
Avoid electrostatic charges when cleaning the surfaces (e.g. sight window)!
Test the leak tightness using suitable means prior to starting up the measuring device again.

5.2 Spare parts availability

The manufacturer adheres to the basic principle that functionally adequate spare parts for each device or each important accessory part will be kept available for a period of 3 years after delivery of the last production run for the device.

This regulation only applies to spare parts which are subject to wear and tear under normal operating conditions.

5.3 Availability of services

The manufacturer offers a range of services to support the customer after expiration of the warranty. These include repair, maintenance, technical support and training.

INFORMATION!
For more precise information, please contact your local sales office.

5.4 Returning the device to the manufacturer

5.4.1 General information

This device has been carefully manufactured and tested. If installed and operated in accordance with these operating instructions, it will rarely present any problems.

CAUTION!
Should you nevertheless need to return a device for inspection or repair, please pay strict attention to the following points:

- *Due to statutory regulations on environmental protection and safeguarding the health and safety of the personnel, the manufacturer may only handle, test and repair returned devices that have been in contact with products without risk to personnel and environment.*
- *This means that the manufacturer can only service this device if it is accompanied by the following certificate (see next section) confirming that the device is safe to handle.*

CAUTION!
If the device has been operated with toxic, caustic, flammable or water-endangering products, you are kindly requested:

- *to check and ensure, if necessary by rinsing or neutralising, that all cavities are free from such dangerous substances,*
- *to enclose a certificate with the device confirming that is safe to handle and stating the product used.*

5.4.2 Form (for copying) to accompany a returned device

CAUTION!
To avoid any risk for our service personel, this form has to be accessible from outside of the packaging with the returned device.

Company:		Address:
Department:		Name:
Tel. no.:		Fax no. and/or Email address:
Manufacturer's order no. or serial no.:		
The device has been operated with the following medium:		
This medium is:		radioactive
		water-hazardous
		toxic
		caustic
		flammable
		We checked that all cavities in the device are free from such substances.
		We have flushed out and neutralized all cavities in the device.
We hereby confirm that there is no risk to persons or the environment through any residual media contained in the device when it is returned.		
Date:		Signature:
Stamp:		

5.5 Disposal

CAUTION!
Disposal must be carried out in accordance with legislation applicable in your country.

Separate collection of WEEE (Waste Electrical and Electronic Equipment) in the European Union:

According to the directive 2012/19/EU, the monitoring and control instruments marked with the WEEE symbol and reaching their end-of-life **must not be disposed of with other waste**.
The user must dispose of the WEEE to a designated collection point for the recycling of WEEE or send them back to our local organisation or authorised representative.

6.1 Operating principle

The flowmeter operates on the float measuring principle

The measuring unit consists of a glass cone in which a float can move freely up and down.

The flow goes from bottom to top.

The float changes position so that the lifting force acting on it F1 is in equilibrium with the form drag F2 and its weight F3: F3 = F1 + F2

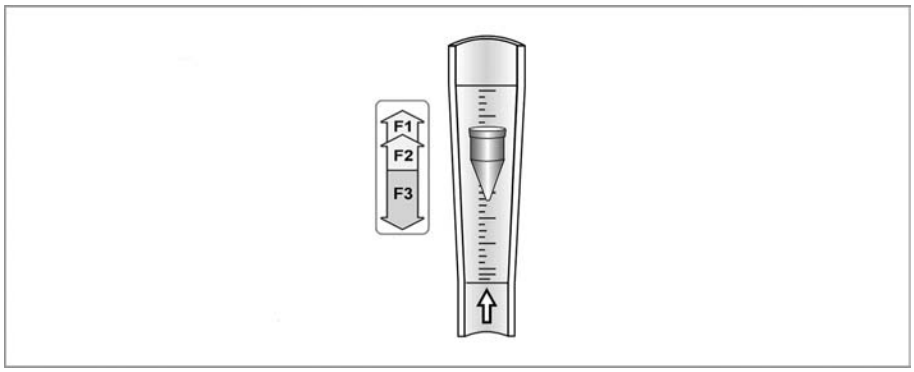

The height of the float is read on the scale of the measuring glass and indicates the flow rate.

The top edge of the float marks the reading line for flow values.

6.2 Technical data

INFORMATION!

- *The following data is provided for general applications. If you require data that is more relevant to your specific application, please contact us or your local sales office.*
- *Additional information (certificates, special tools, software,...) and complete product documentation can be downloaded free of charge from the website (Downloadcenter).*

Measuring system

Application range	Flow measurement of liquids, gases and vapours
Operating method / measuring principle	Variable area measuring principle
Measured value	
Primary measured value	Float position
Secondary measured value	Operating and standard volumetric flow
Measuring accuracy	
Directive	VDI / VDE 3513, sheet 2 (q_G = 50%)
Measuring accuracy	1.0%

Operating conditions

Temperature	
Max. operating temperature TS	-40...+120°C / -40...+248°F
Pressure	
Max. permitted operating gauge pressure PS at TS = 100°C	Pressure equipment directive 97/23/EC
Test pressure PT	Pressure equipment directive 97/23/EC or AD 2000-HP30
DN15, DN25	10 bar ①
DN40	9 bar ①
DN50	7 bar ①

Installation conditions

Inlet condition, run	≥ 5 x DN
Outlet condition, run	≥ 3 x DN

① other pressures upon request

Materials

Flange connection GA24/R	Stainless steel 1.4404 (316 L)
Flange connection GA24/PTFE	Stainless steel 1.14404 (316 L) with a liner made of PTFE
Housing	Steel plate housing (zinc-plated with epoxy/polyester coating)
Measuring cone	Borosilicate glass
Suspended solid particle	Stainless steel 1.4571 (316 Ti) or Hastelloy C2000
	PTFE/insert or TFM (PTFE)
	Aluminum
	Polypropylen (PP)
Suspended solid particle and insert	PVDF (conforms to FDA)
Seals	Neoprene
	PTFE Scherring
	PTFE sleeve

Temperatures

DANGER!
For devices to be used in hazardous areas, special temperature ranges apply. These can be found in the separate instructions.

Max. measuring temperature T_m	-40...+120°C ①	-40...+248°F
Max. ambient temperature $T_{amb.}$	-20...+100°C	-4...+212°F

① higher temperatures on request

Types of limit switches

Type	Switching function	Connection	Shape	Note
MS 14/A	bistable	2-wire, floating	Reed contact	Float with magnet required
TG 21	bistable	2-wire NAMUR	Slotted proximity switch	Float with magnet required

Limit switch use

Size	Cone no.	Limit switch		Size	Cone no.	Limit switch	
DN15	N 18.07	MS14/A		DN25	N 21.09	MS14/A	TG21
	N 18.09	MS14/A			N 21.13	MS14/A	TG21
	N 18.13	MS14/A			N 21.18	MS14/A	TG21
	N 19.09	MS14/A			N 21.25	MS14/A	TG21
	N 19.13	MS14/A		DN40	N 41.09	MS14/A	TG21
	N 19.19	MS14/A			N 41.13	MS14/A	TG21
	N 19.26	MS14/A			N 41.19	MS14/A	TG21
				DN50	N 51.10	MS14/A	TG21
					N 51.15	MS14/A	TG21
					N 51.21	MS14/A	TG21

Technical data for limit switches

Technical data MS14

Contact type	Normally open or normally closed, can be reconnected
Switching reproducibility	< 2% of full-scale range
Contact rating	12 VA
Max. turn-on voltage	30 VDC
Max. switching current	0.5 A
Ambient temperature	-20...+85°C / -4...+185°F
Protection category acc. to IEC 60529 / EN 529	IP44

Technical data TG21

Rated voltage	8 VDC
Current consumption, active surface open	3 mA
Current consumption, active surface covered	1 mA
Ambient temperature	-25...+100°C / -13...+212 °F
Protection category acc. to IEC 60529 / EN 529	IP67 / NEMA 6

6.3 Dimensions and weights

Dimensions

Nominal size		a		b		c		d	
DN	Inch	mm	Inch	mm	Inch	mm	Inch	mm	Inch
15	1/2"	500	19.7	300	11.8	84	3.31	82	3.23
25	1"	500	19.7	300	11.8	105	4.13	102	4.02
40	1 1/2"	500	19.7	300	11.8	125	4.92	122	4.80
50	2"	500	19.7	300	11.8	165	6.50	147	5.74

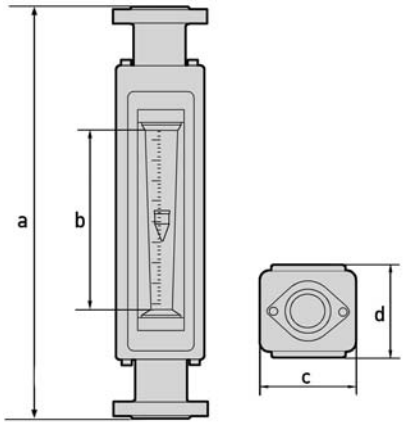

Weights

	approx. kg	approx. lb
DN15	6	13
DN25	10	22
DN40	13	29
DN50	18	40

Process connection

	Connection dimensions according to	Connection	Pressure class
Flanged connections	EN 1092	DN15, DN25	PN25
	EN 1092	DN40 DN50	PN10
	ASME B16.5	1/2"...2"	Class 150 lb / RF
	ASME B16.5	1/2"...2"	Class 300 lb / RF

6.4 Measuring ranges

Measuring ranges GA24

Measuring span:	10 : 1		
Declaration of flow:	Values = 100%	Water: 20°C [68°F]	Air: 20°C [68°F], 1.013 bar abs. [14.7 psia]
Float materials:	1 Stainless Steel or Hastelloy® - 2 PTFE - 3 TFM - 4 Aluminium - 5 Polypropylen (PP)		

Materials →		1	2	3	1	3	4	5	1	2	3	4	5
Cone ↓		Water [l/h]			Air [m^3/h]				Max. pressure loss [mbar]				
N 18.07	DN15	40	25	13	1.5	0.6	0.8	0.5	9	6	2	3	1
N 18.09		63	40	22	2.2	0.95	1.2	0.7	9	7	3	3	2
N 18.13		100	63	35	3	1.5	1.8	1.2	9	8	3	4	2
N 19.09		160	100	55	5	2.2	2.8	1.8	13	9	4	5	2
N 19.13		250	160	85	8	3.3	4.5	2.8	16	11	4	5	2
N 19.19		400	250	140	-	-	-	-	21	14	5	-	-
N 19.26		630	400	230	-	-	-	-	27	17	6	-	-
N 21.09	DN25	630	400	230	18 ①	9	11	7	22	14	6	8	3
N 21.13		1000	630	350	28 ①	14	18	12	23	17	6	8	4
N 21.18		1600	1000	600	49 ①	-	28 ①	17 ①	26	25	7	10	6
N 21.25		2500	1600	950	70 ①	-	42 ①	26 ①	33	40	8	12	9
N 41.09	DN40	1600	1000	600	45 ①	22	28	18	32	18	9	11	5
N 41.13		2500	1600	900	70 ①	36	45 ①	28 ①	34	20	10	12	5
N 41.19		4000	2500	1500	128 ①	-	76 ①	46 ①	38	24	11	15	8
N 51.10	DN50	4000	2500	1500	120 ①	56	70	45	43	25	12	15	7
N 51.15		6300	4000	2400	190 ①	90	110 ①	70 ①	47	30	13	16	7
N 51.21		10000	6300	3500	310 ①	-	170 ①	118 ①	55	42	14	20	10

① only possible with guided float

INFORMATION!
The oper. press. should be at least twice the pressure loss for liquids, and at least 5 times the pressure loss for gases! The specified pressure drops are valid for water and air at maximum flow rate. Other flow ranges on request. Conversion of other media or operating data (pressure, temperature, density, viscosity) is performed using the calculation method in accordance with VDI /VDE Directive 3513

Reference condition for gas measurements:
The flow measurement of gases are refered to
Nl/h or Nm^3/h: Volume flow in Normal state 0°C, 1.013 bar abs. (DIN 1343)
SCFM or SCFH: Volume flow in Standard state 15°C, 1.013 bar abs. (ISO 13443)

Measuring span:	10 : 1		
Declaration of flow:	Values = 100%	Water: 20°C [68°F]	Air: 20°C [68°F], 1.013 bar abs. [14.7 psia]
Float materials:	1 Stainless Steel or Hastelloy® - 2 PTFE - 3 TFM - 4 Aluminium - 5 Polypropylen (PP)		

Materials →		1	2	3	1	3	4	5	1	2	3	4	5
Cone ↓		Water [GPH]			Air [SCFM]				Max. pressure loss [psi]				
N 18.07	DN15	10.6	6.6	3.43	0.93	0.37	0.5	0.31	0.1	0.1	0.03	0.04	0.02
N 18.09		16.6	10.6	5.81	1.36	0.59	1.2	0.43	0.1	0.1	0.04	0.04	0.03
N 18.13		26.4	16.6	9.25	1.86	0.93	0.74	0.74	0.1	0.1	0.04	0.06	0.03
N 19.09		42.3	26.4	14.5	3.1	1.36	1.7	1.1	0.19	0.13	0.06	0.07	0.03
N 19.13		66.0	42.3	22.5	4.96	2.05	2.8	1.7	0.2	0.16	0.06	0.07	0.03
N 19.19		105	66.0	37	-	-	-	-	0.3	0.2	0.07	-	-
N 19.26		166	106	60.8	-	-	-	-	0.4	0.25	0.09	-	-
N 21.09	DN25	166	106	60.8	11.2 ①	5.58	6.8	4.3	0.3	0.2	0.09	0.1	0.06
N 21.13		264	166	92.5	17.4 ①	8.68	11	7.4	0.3	0.25	0.09	0.1	0.06
N 21.18		423	264	158	30.4 ①	-	17 ①	10.5 ①	0.3	0.3	0.1	0.15	0.9
N 21.25		660	423	251	43.4 ①	-	26 ①	16 ①	0.48	0.58	0.1	0.17	0.13
N 41.09	DN40	423	264	158	27.9 ①	13.6	17	11	0.48	0.26	0.1	0.16	0.07
N 41.13		660	423	238	43.4 ①	22.3	28 ①	17.4 ①	0.49	0.29	0.15	0.17	0.07
N 41.19		1057	660	396	79.4 ①	-	47 ①	28.5 ①	0.55	0.35	0.16	0.22	0.1
N 51.10	DN50	1057	660	396	74.4 ①	34.7	43.4	27.9	0.62	0.36	0.17	0.22	0.1
N 51.15		1664	1057	634	118 ①	55.8	68 ①	43.4 ①	0.68	0.44	0.19	0.23	0.1
N 51.21		2642	1664	925	192 ①	-	105 ①	73 ①	0.8	0.61	0.2	0.29	0.15

① only possible with guided float

INFORMATION!
The oper. press. should be at least twice the pressure loss for liquids, and at least 5 times the pressure loss for gases! The specified pressure drops are valid for water and air at maximum flow rate. Other flow ranges on request. Conversion of other media or operating data (pressure, temperature, density, viscosity) is performed using the calculation method in accordance with VDI /VDE Directive 3513

Reference condition for gas measurements:
The flow measurement of gases are refered to
Nl/h or Nm^3/h: Volume flow in Normal state 0°C, 1.013 bar abs. (DIN 1343)
SCFM or SCFH: Volume flow in Standard state 15°C, 1.013 bar abs. (ISO 13443)

KROHNE – Process instrumentation and measurement solutions

- Flow
- Level
- Temperature
- Pressure
- Process Analysis
- Services

Head Office KROHNE Messtechnik GmbH
Ludwig-Krohne-Str. 5
47058 Duisburg (Germany)
Tel.: +49 203 301 0
Fax: +49 203 301 10389
info@krohne.com

The current list of all KROHNE contacts and addresses can be found at:
www.krohne.com

© KROHNE 08/2015 - 4001229901 - MA GA24 R01 en - Subject to change without notice.