OPTIFLEX 4300 C Supplementary instructions

Guided Radar (TDR) Level Transmitter for the marine industry

Supplementary Instructions for ATEX applications

© KROHNE 07/2015 - 4000523603 - AD ATEX OPTIFLEX 4300 R03 en

KROHNE

CONTENTS

1 General safety information 4

1.1 Scope of the document 4
1.2 Device description 4
1.3 Standards and approvals 4
1.4 Device categories 5
1.4.1 Ex ia-approved devices 5
1.4.2 Ex ia/d-, Ex d ia- and Ex ia tb-approved devices 6
1.5 ATEX nameplates 7

2 Installation 8

2.1 Special conditions 8
2.2 Precautions 8
2.2.1 General notes 8
2.2.2 Electrostatic discharge 8
2.2.3 Special conditions 9
2.3 Operating conditions 10
2.3.1 Ambient and flange temperature 10
2.3.2 Maximum surface temperature of the housing 13

3 Electrical connections 14

3.1 General notes 14
3.2 Terminal compartment 14
3.2.1 How to open the terminal compartment 14
3.2.2 How to close the terminal compartment 15
3.3 Terminal tightening capacity 15
3.4 Equipotential bonding system 16
3.5 Ex ia equipment 16
3.5.1 How to connect the electrical cables 16
3.5.2 Maximum intrinsically-safe values for the electrical circuit 16
3.5.3 Supply voltage 17
3.5.4 Electrical schematic 18
3.6 Ex ia/d, Ex d ia and Ex ia tb equipment 19
3.6.1 General notes 19
3.6.2 How to connect the electrical cables 19
3.6.3 Supply voltage 20
3.6.4 Electrical schematic 21

4 Start-up 22

5 Service 23

5.1 Periodic maintenance 23
5.2 Keep the device clean 23
5.3 How to remove the device 24

5.4 Returning the device to the manufacturer 24
5.4.1 General information 24
5.4.2 Form (for copying) to accompany a returned device 25

6 Notes 26

1.1 Scope of the document

These instructions are applicable only to the explosion-protection version of the TDR level transmitter. For all other data, use the Quick Start and Handbook. If you do not have these documents, please contact the nearest office or download them from the manufacturer's internet site.

INFORMATION!
The information in these supplementary instructions only contains the data applicable to explosion protection. The technical data for the non-Ex version in the Handbook shall be valid in its current version, provided that it is not rendered invalid or replaced by these supplementary instructions.

WARNING!
Installation, commissioning and maintenance may only be carried out by "Personnel trained in explosion protection".

1.2 Device description

This device is a 2-wire level transmitter that uses TDR (Time Domain Reflectometry) / Guided Radar technology. The device measures the level, distance, volume and mass of liquids, liquid gases, pastes, powders, slurries and granular products. It is also suitable for the continuous and simultaneous measurement of level and interface of 2 liquids. Measurements are displayed via a DTM (device type manager) for remote communication or an optional integrated display screen with wizard-driven setup and online help functions.

The level transmitter is approved for use in potentially explosive atmospheres when equipped with the appropriate options.

Ex ia-approved devices can also be equipped with an external sensor to measure process temperature, pressure etc.

1.3 Standards and approvals

DANGER!
In compliance with European Directive 94/9/EC (ATEX 100a), the ATEX version of the device described in these Supplementary Instructions conforms to European Standards EN 60079-0:2012 +A11, EN 60079-1:2007, EN 60079-11:2012, EN 60079-26:2007 and EN 60079-31:2014. The Ex ia, Ex ia/d, Ex d ia and Ex ia tb versions are certified for use in hazardous areas by the DEKRA Certification B.V. under KEMA 04ATEX1219 X.

WARNING!
Carefully read the ATEX approval certificate. Obey the boundary conditions.

The certificate is given on the DVD-ROM supplied with the device. You can also download the certificate from our internet site.

1.4 Device categories

1.4.1 Ex ia-approved devices

The Ex ia-approved device has the markings that follow for Gas Groups:

HP and HT/HP versions

- II 1 G Ex ia IIC T6...T2 Ga;
- II 1/2 G Ex ia IIC T6...T2 Ga/Gb;
- II 2 G Ex ia IIC T6...T2 Gb

All other versions

- II 1 G Ex ia IIC T6...T3 Ga;
- II 1/2 G Ex ia IIC T6...T3 Ga/Gb;
- II 2 G Ex ia IIC T6...T3 Gb

The Ex ia-approved device is suitable for use in potentially explosive atmospheres of all flammable substances in Gas Groups IIA, IIB and IIC. It is certified for applications requiring Category 1 G (gases, vapours or mists) and EPL Ga or Category 1/2 G and EPL Ga/Gb or Category 2 G and EPL Gb equipment, when fitted with the appropriate options. It also agrees with temperature class T1 (Gas Groups) if the temperature limits are obeyed. For more data, refer to *Ambient and flange temperature* on page 10.

Category 1 G equipment are used in zone 0. Category 1/2 G equipment are used in zone 0, but they are installed in the boundary wall between zone 0 and zone 1 (the probe is in zone 0 and the signal converter is in zone 1). Category 2 G equipment are used in zone 1.

WARNING!
Make sure that the installation of the device between zone 0 and zone 1 agrees with EN 60079-26.

The Ex ia-approved device has the markings that follow for Dust Groups:

- II 1 D Ex ia IIIC T95°C Da;
- II 1/2 D Ex ia IIIC T95°C Da/Db;
- II 2 D Ex ia IIIC T95°C Db

The Ex ia-approved device is suitable for use in potentially explosive atmospheres of all flammable substances in Dust Groups IIIA, IIIB and IIIC. It is certified for applications requiring Category 1 D (dust) and EPL Da or Category 1/2 D and EPL Da/Db or Category 2 D and EPL Db equipment, when fitted with the appropriate options. The surface temperature of the housing (without a layer of dust) cannot be more than +95°C / +203°F when the ambient temperature is +80°C / +176°F.

Category 1 D equipment are used in zone 20. Category 1/2 D equipment are used in zone 20, but they are installed in the boundary wall between zone 20 and zone 21 (the probe is in zone 20 and the signal converter is in zone 21). Category 2 D equipment are used in zone 21.

1.4.2 Ex ia/d-, Ex d ia- and Ex ia tb-approved devices

Ex ia/d and Ex d ia-approved devices have the markings that follow:

HP and HT/HP versions

- II 1/2 G Ex ia/d IIC T6...T2 Ga/Gb;
- II 2 G Ex d ia IIC T6...T2 Gb

All other versions

- II 1/2 G Ex ia/d IIC T6...T3 Ga/Gb;
- II 2 G Ex d ia IIC T6...T3 Gb

Ex ia/d- and Ex d ia-approved devices are suitable for use in potentially explosive atmospheres of all flammable substances in Gas Groups IIA, IIB and IIC. They are certified for applications requiring Category 1/2 G (gases, vapours or mists) and EPL Ga/Gb or Category 2 G and EPL Gb equipment, when fitted with the appropriate options. They also agree with temperature class T1 (Gas Groups) if the temperature limits are obeyed. For more data, refer to *Ambient and flange temperature* on page 10.

Category 1/2 G equipment are used in zone 0, but they are installed in the boundary wall between zone 0 and zone 1 (the probe is in zone 0 and the signal converter is in zone 1). Category 2 G equipment are used in zone 1.

INFORMATION!
Ex ia/d approval is applicable to Category 1/2 G and EPL Ga/Gb equipment. Ex d ia approval is applicable to Category 2 G and EPL Gb equipment.

The Ex ia tb-approved device has the markings that follow:

- II 1/2 D Ex ia tb IIIC T95°C Da/Db;
- II 2 D Ex ia tb IIIC T95°C Db

The Ex ia tb-approved device is suitable for use in potentially explosive atmospheres of all flammable substances in Dust Groups IIIA, IIIB and IIIC. It is certified for applications requiring Category 1/2 D (dust) and EPL Da/Db or 2 D and EPL Db equipment, when fitted with the appropriate options. The surface temperature of the housing (without a layer of dust) cannot be more than +95°C / +203°F when the ambient temperature is +80°C / +176°F.

Category 1/2 D equipment are used in zone 20, but they are installed in the boundary wall between zone 20 and zone 21 (the probe is in zone 20 and the signal converter is in zone 21). Category 2 D equipment are used in zone 21.

1.5 ATEX nameplates

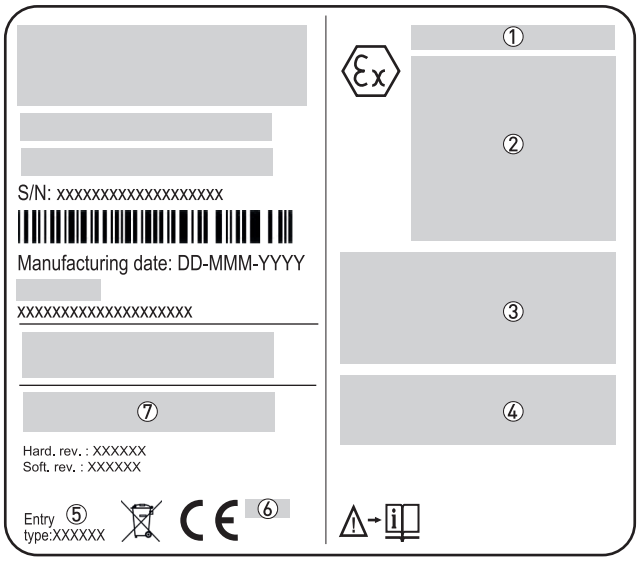

Figure 1-1: Nameplate on the signal converter housing

① ATEX certification agency code
② Equipment approval category (explosive atmosphere – gas), types of device protection including approved Gas Groups and temperature classes and equipment protection level
Equipment category (explosive atmosphere – dust), types of device protection including approved Dust Groups, maximum surface temperature of the housing and equipment protection level
③ **Ex ia approvals:** Intrinsically-safe circuit data
Ex ia/d, Ex d ia or Ex ia tb approvals: Maximum voltage in accordance with EN 60079-0. Refer to ⑦ for the input voltage range.
④ **Ex ia/d, Ex d ia or Ex ia tb approvals:** Minimum waiting time after the device is de-energized before it is safe to open the terminal compartment
⑤ Cable entry type and size (M20×1.5, M25×1.5, ½ NPT or G ½)
⑥ Notified body number
⑦ Input voltage range and maximum current (4...20 mA passive – HART)

2.1 Special conditions

This device can be installed on the applicable auxiliary equipment: a bypass chamber, a stilling well or a communicating pipe.

2.2 Precautions

2.2.1 General notes

WARNING!
When you install the device, obey the conditions in the EC-Type Examination certificate. These conditions include:

- *The special conditions for safe use.*
- *The Essential Health and Safety Requirements.*

The certificate is given on the DVD-ROM supplied with the device. You can also download the certificate from our internet site.

DANGER!
This installation must agree with EN 60079-14: Explosive atmospheres – Part 14: Electrical installations design, selection and erection.

Make sure that:

- you can get access to the device,
- there is sufficient space around the device for inspections
- you can see the device nameplate, and
- there are no external forces applied on the device.

2.2.2 Electrostatic discharge

DANGER!
Risk of electrostatic discharge from painted surfaces, the blue plastic sun cover, the conduit of the remote housing option and the optional plastic protective sheath (made of PVC, PVDF or PP) on single rod probes. Make sure that all personnel and equipment are correctly grounded.

DANGER!
Take the necessary antistatic precautions if:

- *you handle the device in potentially explosive atmospheres,*
- *you install the device in potentially explosive atmospheres or*
- *you use the device in potentially explosive atmospheres.*

Install the device correctly to prevent electrostatic discharge. Make sure that all equipment is correctly grounded.

Make sure that the housing and adjacent objects do not rub together.

If dirt collects on the device, clean it with a damp cloth.

WARNING!
If there is a risk of electrostatic discharge, FEP-coated single cable probes and plastic protective sheaths on single rod probes cannot be used with Gas Group IIC or in Zone 0.

Do not install in a location where the electrostatic charge can increase. This includes:

- locations near ventilation systems,
- locations where there is a risk of an increase in electrostatic charge caused by compressed air and dust,
- locations near machines that use friction,
- locations near systems that apply electrons as a spray (e.g. near electrostatic painting systems), and
- locations near other machines and systems that can have large electrostatic charges.

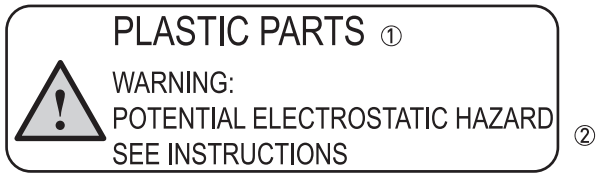

Figure 2-1: ESD warning sticker (below the device nameplate)

① Text: Plastic Parts
② Text: Warning! Potential electrostatic hazard – see instructions

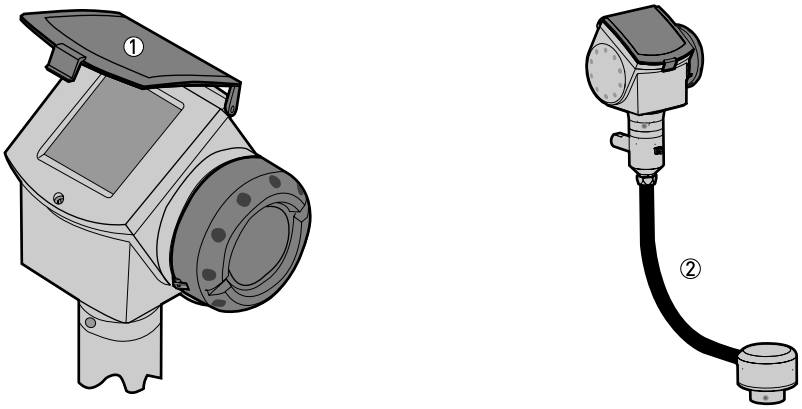

Figure 2-2: Risk of ESD: sun cover and remote housing conduit

① Sun cover
② Conduit of the remote housing option

2.2.3 Special conditions

WARNING!
Aluminium housing: Possible source of ignition in a potentially explosive atmosphere where it is necessary to use Category 1 G or EPL Ga equipment. The housing is made of either aluminium alloy or stainless steel. If the device has an aluminium alloy housing, make sure that iron/steel objects do not hit or rub against the device.

INFORMATION!
The display agrees with the low-energy impact test requirements.

2.3 Operating conditions

The allowable ambient temperature and corresponding flange temperature range for the device depends on the temperature classes marked on the nameplate.

2.3.1 Ambient and flange temperature

Because product temperature has an effect on the device, more than one temperature class is given. The temperature class is related to the product temperature and the temperature of the adjacent area.

WARNING!
The gasket temperature must be in the approved limits. For more data, refer to "Pressure and temperature ranges" in the Installation chapter of the handbook.

INFORMATION!
The remote converter and Metaglas® options use the values that follow.

WARNING!
The reference point for the process temperature is the flange facing (flanges) or the thread stop (threaded connections) of the device. In the tables that follow, this reference point will be referred to as the "flange temperature".

WARNING!
An explosive atmosphere is a mixture of air and flammable gases, vapour, mist or dust in atmospheric conditions. If you do not use the device in these conditions (T_{atm} = -20...+60°C / -4...+140°F and p_{atm} = 0.8...1.1 barg / 11.60...15.95 psig), do an analysis of the risk of ignition.

T_{atm} = atmospheric temperature and p_{atm} = atmospheric pressure.

WARNING!
If the device must operate at a high process temperature, make sure that the maximum flange temperature and maximum ambient temperature are not more than the values given in the table.

The maximum permitted process temperatures are applicable in these conditions. Refer also to the tables that follow.

- Device installation must agree with the instructions given in the handbook.
- Make sure that the device temperature does not increase because of other heat sources (sunlight, adjacent system components etc.). The device must not be operated above the maximum permitted ambient temperature.
- Do not put insulation around the signal converter. Make sure that the airflow around the signal converter is sufficient. It is permitted to have insulation on the pipe (stilling well) and the flange.

Equipment category 1 G: Ex ia devices only

Temperature class	Ambient temperature		Flange temperature (process temperature)	
	[°C]	[°F]	[°C]	[°F]
T6	-20…+57	-4…+134	-20…+60	-4…+140

Equipment category 1/2 G: Ex ia and Ex ia/d devices

Temperature class	Ambient temperature		Flange temperature (process temperature)	
	[°C]	[°F]	[°C]	[°F]
T6	-40…+57	-40…+134	-20…+60	-4…+140
T5	-40…+72	-40…+161	-20…+60	-4…+140
T4	-40…+80	-40…+176	-20…+60	-4…+140

Equipment category 2 G: Ex ia and Ex d ia devices

Temperature class	Ambient temperature						Flange temperature (process temperature)	
	Ø2 mm / Ø0.08" single cable probe (HT version)		Ø2 mm / Ø0.08" single cable probe (other versions)		All other probe types			
	[°C]	[°F]	[°C]	[°F]	[°C]	[°F]	[°C]	[°F]
T6	-40…+57	-40…+134	-40…+57	-40…+134	-40…+57	-40…+134	-50…+60 ①	-58…+140 ①
	-40…+53	-40…+127	-40…+49	-40…+120	-40…+52	-40…+125	-50…+85 ①	-58…+185 ①
T5	-40…+72	-40…+161	-40…+72	-40…+161	-40…+72	-40…+161	-50…+75 ①	-58…+167 ①
	-40…+68	-40…+154	-40…+64	-40…+147	-40…+67	-40…+152	-50…+100 ①	-58…+212 ①
T4	-40…+80	-40…+176	-40…+80	-40…+176	-40…+80	-40…+176	-50…+85 ①	-58…+185 ①
	-40…+75	-40…+167	-40…+72	-40…+161	-40…+75	-40…+167	-50…+110 ①	-58…+230 ①
	-40…+72	-40…+161	-40…+65	-40…+149	-40…+70	-40…+158	-50…+135 ①	-58…+275 ①
T3	-40…+70	-40…+158	-40…+60	-40…+140	-40…+65	-40…+149	-50…+150 ①	-58…+302 ①
	-40…+66 ②	-40…+160 ②	—	—	-40…+60 ②	-40…+140 ②	-50…+180 ①	-58…+356 ①
	-40…+64 ②	-40…+151 ②	—	—	-40…+55 ②	-40…+131 ②	-50…+200 ①	-58…+392 ①
T2	-40…+57 ②	-40…+134 ②	—	—	—	—	-50…+250 ①	-58…+482 ①
	-40…+50 ②	-40…+122 ②	—	—	—	—	-50...+300 ①	-58…+572 ①

① Min. -50°C / -58°F, if an EPDM gasket is used. Min. -40°C / -40°F, if an FKM/FPM gasket is used. Min. -20°C / -4°F, if a Kalrez® 6375 gasket is used.

② If the device has an adaptor for BM 100 probes, the flange temperature must be less than +150°C / +302°F

Equipment category 1 D: Ex ia devices only
Equipment category 1/2 D, 2 D: Ex ia and Ex ia tb devices

Ambient temperature		Flange temperature (process temperature)					
		Ø2 mm / Ø0.08" single cable probe (HT version)		Ø2 mm / Ø0.08" single cable probe (other versions)		Other probes	
[°C]	[°F]	[°C]	[°F]	[°C]	[°F]	[°C]	[°F]
-40…+80	-40…+176	-50…+300 ①	-58…+572 ①	-50…+150 ①	-58…+302 ①	-50…+200 ①	-58…+392 ①

① Min. -50°C / -58°F, if an EPDM gasket is used. Min. -40°C / -40°F, if an FKM/FPM gasket is used. Min. -20°C / -4°F, if a Kalrez® 6375 gasket is used.

2.3.2 Maximum surface temperature of the housing

Equipment category 1 D: Ex ia devices only
Equipment category 1/2 D, 2 D: Ex ia and Ex ia tb devices

Max. ambient temperature						Max. flange temperature		Max. surface temperature of the housing	
Ø2 mm / Ø0.08¨ single cable probe (HT version)		Ø2 mm / Ø0.08¨ single cable probe (other versions)		All other probes					
[°C]	[°F]	[°C]	[°F]	[°C]	[°F]	[°C]	[°F]	[°C]	[°F]
+60	+140	+60	+140	+60	+140	+60	+140	+67	+152
+75	+167	+75	+167	+75	+167	+75	+167	+82	+179
+80	+176	+80	+176	+80	+176	+85	+185	+92	+197
+75	+167	+65	+149	+70	+158	+150	+302	≤+90	≤+194
+69	+157	—	—	+60	+140	+200	+392	≤+90	≤+194
+55	+131	—	—	—	—	+300	+572	≤+90	≤+194

INFORMATION!
For applications for which Category 2 D and EPL Gb equipment are necessary, the surface temperature of the bottom of the transmitter can be as high as the flange temperature. We recommend that you put insulation on these parts if the safety factor related to the minimum dust ignition temperature does not agree with rules given in EN 60079-14.

3.1 General notes

WARNING!

- *De-energize the circuit.*
- *Use the applicable cable glands for the cable entry openings in the housing (M20×1.5, M25×1.5, ½ NPT or G ½). For the cable entry size, refer to the device nameplate. It is not possible to have the G ½ cable entry option with Ex d- or Ex t-approved devices.*
- *If ambient temperature > +70° C / > +158° F, use heat-resistant cables, cable glands and cable entry plugs certified for continuous operation above +80° C / +176° F.*

3.2 Terminal compartment

3.2.1 How to open the terminal compartment

WARNING!
If dirt collects on the housing, clean the device with a damp cloth before you remove the terminal compartment cover.

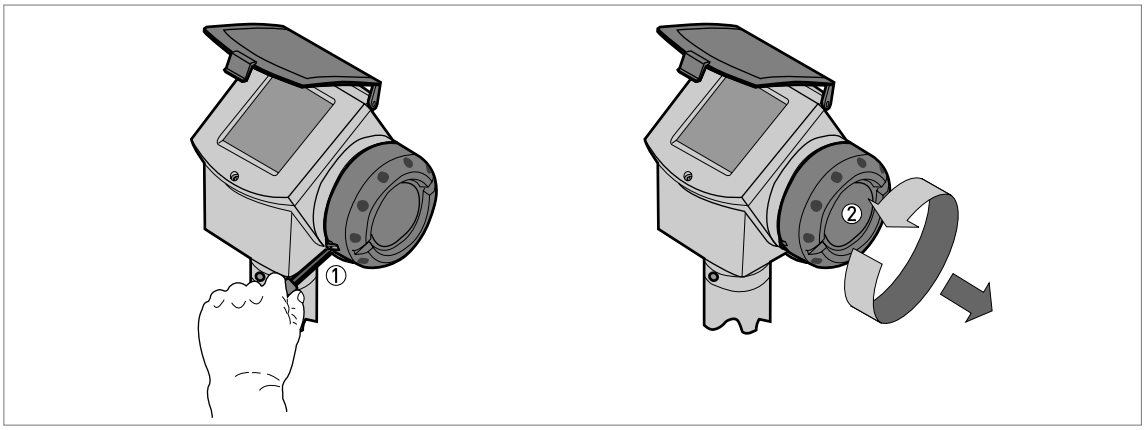

Figure 3-1: How to open the terminal compartment

① Cover stop
② Terminal compartment cover

WARNING!
Do not remove the terminal compartment cover while the electrical power is connected.

- De-energize the circuit.
- After the time given in the table that follows, remove the cover stop ①.

➲ Use a 3 mm Allen wrench.

- Remove the terminal compartment cover ②.

Time necessary to de-energize an Ex ia/d-, Ex d ia- or Ex ia tb-approved device

Temperature class	Time to de-energize an Ex ia/d-, Ex d ia- or Ex ia tb-approved device
	[minutes]
T6	20
T5	10
Others	Not necessary

3.2.2 How to close the terminal compartment

WARNING!
If dirt collects on the terminal compartment gasket, clean it before you attach the terminal compartment cover.

DANGER!
Ex d applications
Make sure that the terminal compartment is correctly sealed. An explosion can cause death or injury to personnel and/or damage to equipment. Obey the instructions that follow:

- Attach the terminal compartment cover ②. Turn the terminal compartment cover carefully to prevent damage to the thread and the gasket.
- Make sure that the terminal compartment cover is tight.
- Use a 3 mm Allen wrench to attach the cover stop ①.
- Make sure that the cover stop ① screw is tight.

3.3 Terminal tightening capacity

The terminal tightening capacity for current output terminals 1 and 2 is:

Type of wire	Terminal tightening capacity	
	[mm²]	[AWG]
Rigid	4	11
Flexible	2.5	13

3.4 Equipotential bonding system

Connect the device to the equipotential bonding system for the hazardous location.

You can use 2 terminals to connect the device to the equipotential bonding system:

- a ground connection in the terminal compartment and
- an external ground terminal immediately below the signal converter

Makes sure that the electrical connections agree with the applicable regulations (EN 60079-14). Use the ground terminal in the terminal compartment to connect all electrical cable shields to ground.

Ground all remaining electrical wires in the hazardous location or make sure that they have good insulation. Refer also to the sections that follow in this chapter.

Ex ia-approved devices

The device electronics are isolated with a rating of 500 V_{RMS}.

Ex ia/d-, Ex d ia- or Ex ia tb-approved devices

The device does not agree with the 500 V_{RMS} dielectric strength requirement. Obey all the instructions given in the "Electrical connections" chapter.

3.5 Ex ia equipment

3.5.1 How to connect the electrical cables

Refer to the handbook for data about the device terminals.

Cable entries are supplied on customer demand. If you supply the cable entries, this part must have a degree of ingress protection IP≥6X (EN 60529). We recommend that you use a part that has a degree of ingress protection IP≥66. Make sure that the cable gland is sealed.

Obey the instructions that follow:

- Electrical wires must agree with applicable standards (e.g. EN 60079-14).
- Use the electrical connection procedure in the Handbook.
- Put the electrical wires down, set them in position, and safely attach them to prevent damage. The electrical wires must also be a sufficient distance from hot surfaces.
- Make sure that unused electrical wires are safely connected to the ground potential of the hazardous area. If this is not possible, make sure that each of the unused electrical wires are safely isolated (other electrical wires, ground etc.) and rated for a test voltage ≥500 V_{RMS}.
- If it is necessary, make sure the electrical wire insulation gives good protection from corrosion.
- Connect only to separate certified, intrinsically-safe circuits. Make sure that the electrical circuit characteristics are not more than the values that follow.

3.5.2 Maximum intrinsically-safe values for the electrical circuit

INFORMATION!
The optional second output is galvanically isolated from the main power supply, output 1 and parts of the device that are grounded.

Level transmitter without an external sensor (output terminal 1 or 2)

- U_i =30 V
- I_i =300 mA
- P_i =1 W
- C_i =16 nF
- L_i =29 µH

Level transmitter with an external sensor: output terminal 1

- U_i =30 V
- I_i =300 mA
- P_i =1 W
- C_i =8 nF
- L_i =141 µH

Level transmitter with external sensor: output terminal 2

- C_i =0 nF
- L_i =0 µH

3.5.3 Supply voltage

Level transmitter without external sensor

Current output terminal	Minimum voltage at output terminal [VDC]	Maximum voltage at output terminal [VDC]
1 (U_{S1})	14 ①	30 ①
2 (U_{S2}) ②	10 ①	30 ①

① Minimum voltage at output terminal for a current output of 22 mA
② Optional. Use a second power supply. This power supply energizes current output terminal 2 only.

Level transmitter with external sensor

Current output terminal	Minimum voltage at output terminal [VDC]	Maximum voltage at output terminal [VDC]
1 (U_{S1})	14 ①	30 ①
2 (U_{S2}) ②	③	③

① Minimum voltage at output terminal for a current output of 22 mA
② Use a second power supply. This power supply energizes current output terminal 2 only.
③ For more data, refer to the data sheet for the external sensor

3.5.4 Electrical schematic

Without an external sensor

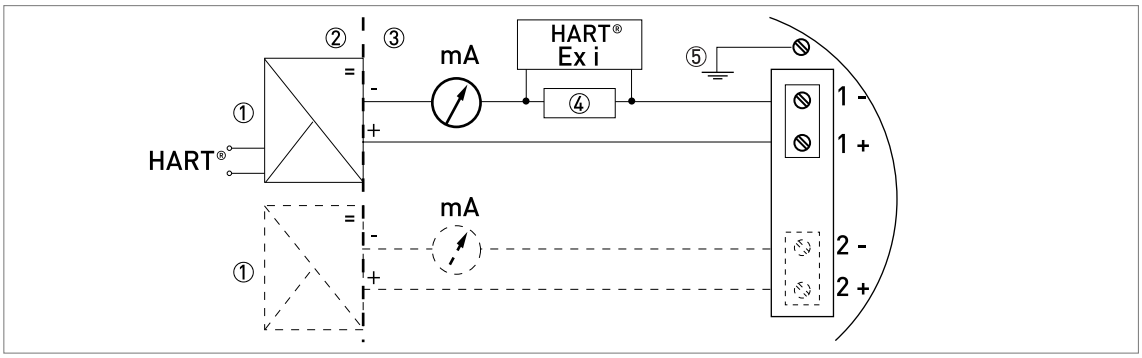

Figure 3-2: Electrical schematic for Ex i-approved equipment without an external sensor

① Intrinsically-safe power supply (use a second power supply for optional terminal 2 if the device has two 4...20 mA outputs)
② Non-Ex zone
③ Ex zone
④ Resistor for HART® communication
⑤ Grounding wire – if the electrical wire is shielded (braided wire etc.)

With an external sensor

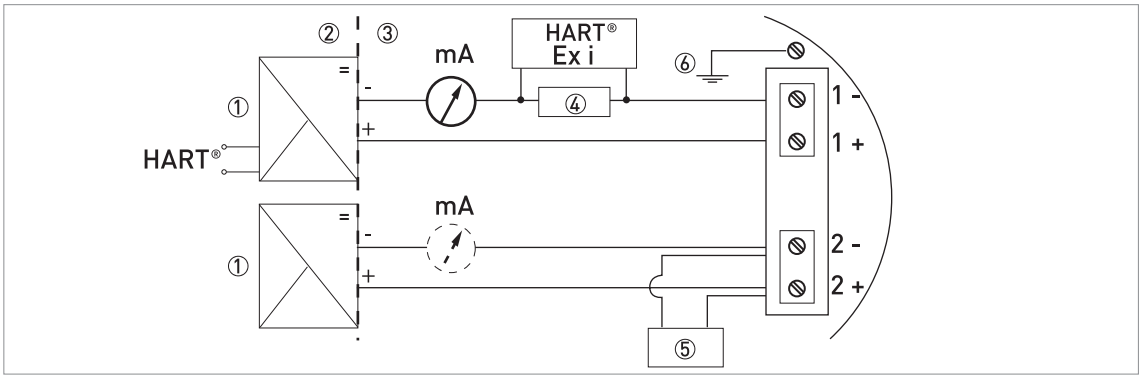

Figure 3-3: Electrical schematic for Ex i-approved equipment with an external sensor

① Intrinsically-safe power supply (use a second power supply for terminal 2 if the optional external sensor is attached to the device)
② Non-Ex zone
③ Ex zone
④ Resistor for HART® communication
⑤ Optional external sensor
⑥ Grounding wire – if the electrical wire is shielded (braided wire etc.)

INFORMATION!
For applications where equipment category II 2 G and EPL Gb are necessary, you must also connect the device to an intrinsically-safe circuit with protection concept "ib". If the device is connected to an intrinsically-safe circuit with protection concept "ia", the device operates with a higher level of safety.

3.6 Ex ia/d, Ex d ia and Ex ia tb equipment

3.6.1 General notes

Ex ia/d-, Ex d ia- and Ex ia tb-approved equipment have two separate compartments. The electronics in the electronics block compartment are Ex ia-approved and the terminals compartment is Ex d / Ex t-approved.

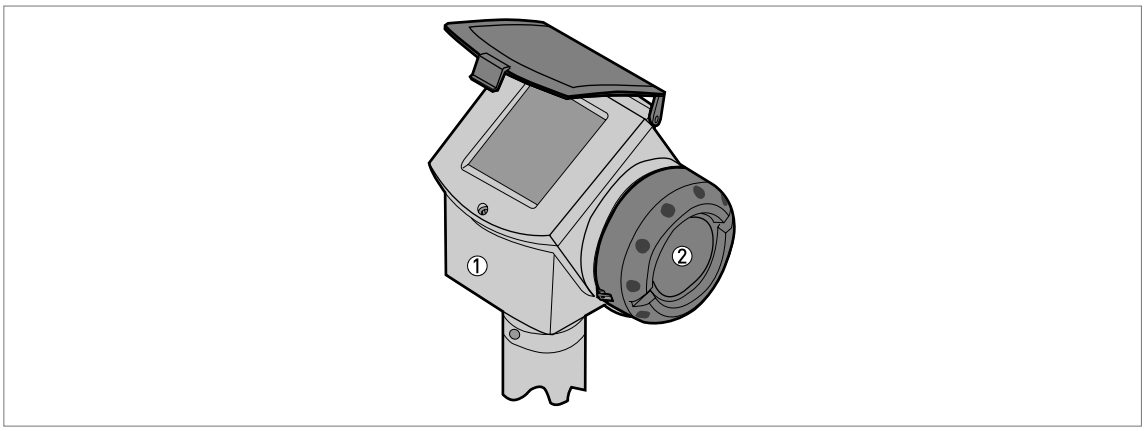

Figure 3-4: Compartments in Ex ia/d-, Ex d ia- and Ex ia tb-approved equipment

① Electronics block (Ex ia) compartment
② Terminal (Ex d / Ex t) compartment

The external sensor is not available for Ex d ia / Ex ia tb-approved equipment.

INFORMATION!
If you must open the electronics block compartment and remove the electronics blocks for servicing, it is not necessary to disconnect the wires from the Ex d / Ex t terminal.

INFORMATION!
The flamepath dimensions are better than the values specified in the European Standard EN 60079-1. For more data, speak to your supplier.

3.6.2 How to connect the electrical cables

Cable entries are supplied on customer demand. If you supply the cable entries, this part must have a degree of ingress protection IP≥6X (EN 60529). We recommend that you use a part that has a degree of ingress protection IP≥66. Make sure that the cable gland is sealed.

WARNING!
Use only Ex d-approved cable entries and plugs for Ex d applications. Use only Ex t-approved cable entries and plugs for Ex t applications.
Do not remove more than 6 mm / 0.2" of insulation from the wire.

Terminal compartment

- If you connect electrical wires to the terminals in the flameproof terminal compartment, use approved flameproof cable glands (M20×1.5, M25×1.5 or ½ NPT). The cable glands must have a test certificate that agrees with EN 60079-1. Obey the instructions given on the test certificates. Make sure that that the tightening capacity of the cable entry is applicable to the diameter of the electrical wire.

- If you use conduits to connect electrical wires to the terminals in the flameproof terminal compartment, obey the instructions that follow. Make sure that the conduits are correctly attached and the flameproof compartment is sealed. The flameproof joint must have a minimum thread length of 8 mm / 0.32¨. The conduits must have a test certificate that agrees with EN 60079-1. Use conduit stopping boxes that agree with precautions given in the test certificate and data in standards related to the installation of the conduit.
- If you connect electrical wires to the terminals in the dustproof terminal compartment, use approved flameproof cable glands (M20×1.5, M25×1.5 or ½ NPT). The cable glands must have a test certificate that agrees with EN 60079-31. Obey the instructions given on the test certificates. Make sure that that the tightening capacity of the cable entry is applicable to diameter of the electrical wire.

Obey instructions that follow:

- The electrical wiring must agree with the applicable standards (e.g. EN 60079-14).
- Put the electrical wires down, set them in position, and safely attach them to prevent damage. The electrical wires must also be a sufficient distance from hot surfaces.
- If it is necessary, make sure that the electrical wire insulation gives good protection from corrosion.
- Make sure that the device is connected to a PELV (protective extra-low voltage) circuit.
- Make sure that electrical wires for the converter are isolated from the ground of the hazardous area. This data is also applicable to the equipotential bonding conductors (PE).
- Make sure that unused electrical wires and shields are safely connected to the ground potential of the hazardous area. If this is not possible, make sure that each of the unused electrical wires are safely isolated (other electrical wires, ground etc.) and rated for a test voltage ≥1500 V_{RMS}.

Load resistor

- Connect the load resistor to the positive terminal of the power supply.
- Ground the negative connection.
- If the load resistor has to be connected to the negative terminal, the loop resistance must not be more than 250 ohms.

CAUTION!
Do not ground the positive connection.

3.6.3 Supply voltage

Current output terminal	Minimum voltage at output terminal [VDC]	Maximum voltage at output terminal [VDC]
1 (U_{S1})	20 ①	36 ①
2 (U_{S2}) ②	10 ①	30 ①

① Minimum voltage at output terminal for a current output of 22 mA
② Optional. Use a second power supply. This power supply energizes current output terminal 2 only.

3.6.4 Electrical schematic

CAUTION!
Make sure that you connect the load resistor to the positive side.

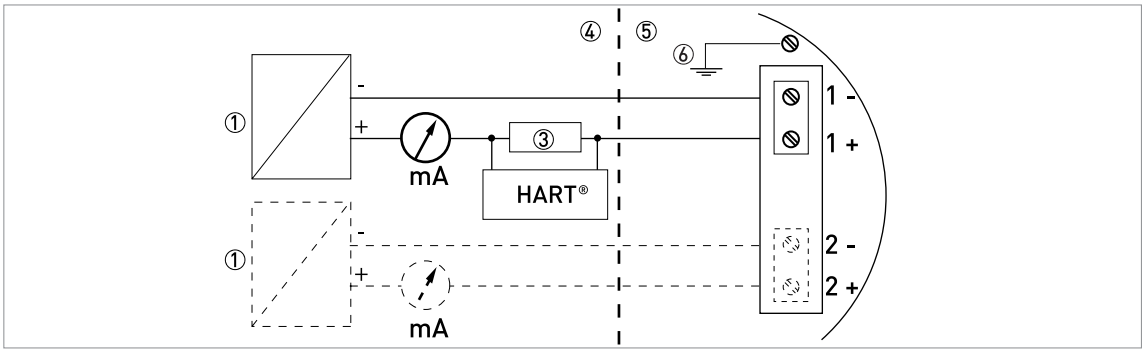

Figure 3-5: Electrical schematic for Ex ia/d-, Ex d ia- and Ex ia tb-approved equipment (with galvanic isolation)

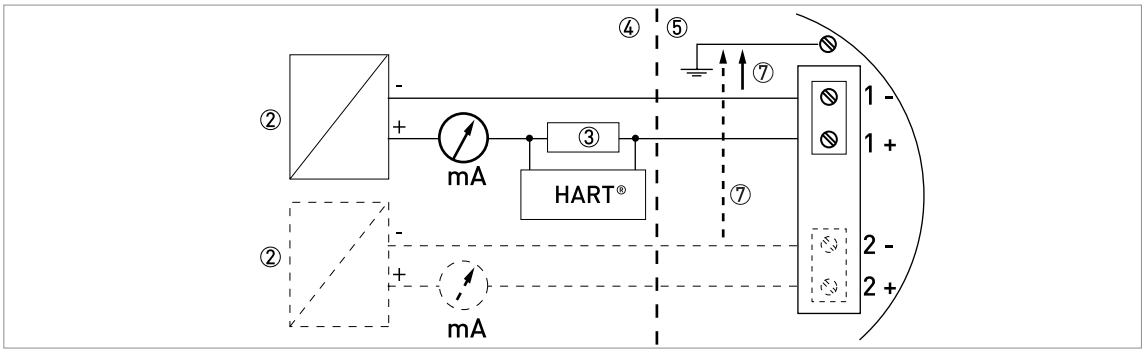

Figure 3-6: Electrical schematic for Ex ia/d-, Ex d ia- and Ex ia tb-approved equipment (without galvanic isolation)

① Galvanically-isolated power supply (use a second power supply for optional terminal 2)
② Power supply (use a second power supply for optional terminal 2)
③ Resistor for HART® communication
④ Non-Ex zone
⑤ Ex zone
⑥ Grounding wire – if the electrical wire is shielded (braided wire etc.)
⑦ |U| < 5 V

WARNING!
Make sure that it is safe to supply electrical power. Do a start-up check:

- Are the wetted components (gasket, flange and probe) resistant to corrosion by the tank product?
- Does the information given on the nameplate agree with the application?
- Did you connect the equipotential bonding system correctly?
- **Ex d applications:** Are the cable entries, plugs and adaptors Ex d-approved?
- **Ex t applications:** Are the cable entries, plugs and adaptors Ex t-approved?
- **Ex i applications:** Are you using an intrinsically-safe barrier within the correct parameters? For more data, refer to *Ex ia equipment* on page 16. The electrical circuit characteristics must not be more than the maximum intrinsically-safe values.
- Did you install the correct cable entries? Is the terminal compartment correctly sealed?

5.1 Periodic maintenance

In normal operational conditions, no maintenance is necessary. If it is necessary, maintenance must be done by approved personnel (the manufacturer or personnel approved by the manufacturer).

INFORMATION!
For more data about regular inspections and maintenance procedures for devices with Ex and other approvals, refer to the related supplementary instructions.

You must remove the device for cleaning. If it is necessary to clean the device, obey the instructions given in the handbook.

5.2 Keep the device clean

DANGER!
Risk of electrostatic discharge from the painted surfaces, the blue plastic sun cover, the conduit of the remote housing option and the optional protective sheath (made of PVC, PVDF or PP) on single rod probes.

WARNING!
Do not clean the painted surfaces, the blue plastic sun cover, the conduit of the remote housing option or the optional protective sheath in a hazardous location.

Obey these instructions:

- Keep the thread of the terminal compartment cover clean.
- If dirt collects on the device, clean it with a damp cloth.
- Clean the plastic sun cover, the painted surfaces and the conduit of the remote housing option and the optional protective sheath with a damp cloth.

5.3 How to remove the device

The installation and removal of the device or the signal converter is a task for approved personnel (operator, fitter, electrician etc.). If you must change the signal converter or all the device, refer to the procedures in the handbook.

If you must do work in a hazardous location:

- Before you open the flameproof or dustproof terminal compartment, de-energize the device. Do not open the terminal compartment immediately. For more data, refer to *How to open the terminal compartment* on page 14.
- Before you remove the device from the process connection, make sure that the tank is not pressurized. A pressurized tank can cause injury to persons when they do work on it.
- Make sure that all electrical wires are isolated from the ground. This is also applicable to Protective Earth (PE), Functional earth (FE) and equipotential bonding conductors.
- Apply grease to dry housing cover seals after you open the terminal compartment. Use a multi-purpose grease (e.g. NONTRIBOS® Li EP2).
- Close the housing cover immediately after maintenance. Make sure that the housing is sealed.

5.4 Returning the device to the manufacturer

5.4.1 General information

This device has been carefully manufactured and tested. If installed and operated in accordance with these operating instructions, it will rarely present any problems.

CAUTION!
Should you nevertheless need to return a device for inspection or repair, please pay strict attention to the following points:

- *Due to statutory regulations on environmental protection and safeguarding the health and safety of the personnel, the manufacturer may only handle, test and repair returned devices that have been in contact with products without risk to personnel and environment.*
- *This means that the manufacturer can only service this device if it is accompanied by the following certificate (see next section) confirming that the device is safe to handle.*

CAUTION!
If the device has been operated with toxic, caustic, flammable or water-endangering products, you are kindly requested:

- *to check and ensure, if necessary by rinsing or neutralising, that all cavities are free from such dangerous substances,*
- *to enclose a certificate with the device confirming that is safe to handle and stating the product used.*

5.4.2 Form (for copying) to accompany a returned device

CAUTION!
To avoid any risk for our service personel, this form has to be accessible from outside of the packaging with the returned device.

Company:		Address:
Department:		Name:
Tel. no.:		Fax no. and/or Email address:
Manufacturer's order no. or serial no.:		
The device has been operated with the following medium:		
This medium is:		radioactive
		water-hazardous
		toxic
		caustic
		flammable
		We checked that all cavities in the device are free from such substances.
		We have flushed out and neutralized all cavities in the device.
We hereby confirm that there is no risk to persons or the environment through any residual media contained in the device when it is returned.		
Date:		Signature:
Stamp:		

KROHNE – Process instrumentation and measurement solutions

- Flow
- Level
- Temperature
- Pressure
- Process Analysis
- Services

Head Office KROHNE Messtechnik GmbH
Ludwig-Krohne-Str. 5
47058 Duisburg (Germany)
Tel.: +49 203 301 0
Fax: +49 203 301 10389
info@krohne.com

The current list of all KROHNE contacts and addresses can be found at:
www.krohne.com

© KROHNE 07/2015 - 4000523603 - AD ATEX OPTIFLEX 4300 R03 en - Subject to change without notice.