IFC 050 Supplementary instructions

Signal converter for electromagnetic flowmeters

Description of Modbus interface

Electronic Revision: ER 3.0.xx
Modbus version: 1.0.xx

KROHNE

CONTENTS

The flow converter with the RS485 interface, is able to communicate with an external device (PC or other suitable computer system) using the Modbus protocol. This option allows data exchange between PC or computer and single or multiple devices.

The bus configuration consists of one external device as a master and one or more converters as slaves. For bus operation the device address (menu C5.1), baudrate (menu C5.2) and settings (menu C5.3, C5.4, C5.5 & C5.6) must be set in the signal converter.

All devices connected to the bus, must have different unique addresses but the same baud rate and settings.

2.1 General technical data

Interface	RS485, galvanically isolated
Baud rate	1200, 2400, 3600, 4800, 9600, 19200, 38400, 57600 or 115200
Protocol	Modbus RTU (available as a separate document on request)
Maximum participants on bus	32 per line, master included (may be extended by repeaters)
Coding	NRZ bit coding
Address range	Modbus: 1...247
Transmission procedure	Half duplex, asynchronous
Bus access	Master / slave
Cable	Shielded twisted pair for RS 485 applications
Distances	Maximum 1.2 km / 3937 ft without repeater (dependant on baud rate and cable specifications)

2.2 Technical data of the Modbus interface (acc. to EIA standards)

Kind of signal transmission	Differential, 2-wire topology
Maximum number of transmitter/receivers	32
Voltage range on converter input	-7...+12 V
Maximum voltage on converter output	5 V
Minimum voltage on driver output, max. load	U_{diff} > 1.5 V
Maximum input current (off state)	-20...+20 µA
Receiver input voltage	-7...+12 V
Sensitivity of the receiver	-200...+200 mV
Receiver input resistance	> 12 kΩ
Short circuit current	< 250 mA

For proper operation of Modbus in half duplex mode in single or multi-drop communication, it is recommended that a termination resistor is applied to both ends of the data line. The simplest form of termination is line-to-line resistor across the differential input.

In RTU mode the Modus protocol requires quiet periods on the communications bus for synchronisation. It is therefore important that the Modbus is not allowed to "float", i.e. unreferenced to 0 V, as this could lead to spurious signals due to noise pick-up. It is therefore necessary to employ biasing resistors at one point on the bus network, normally the "end".

Converter Fct. No.	Display	Description and settings
C5.1	Slave Address	Selects the Modbus address of the device. Range: 1..247 (default = 1)
C5.2	Baud Rate	Selects the baud rate of the device. Options: 1200 / 2400 / 3600 / 4800 / 9600 / 19200 (default) / 38400 / 57600 / 115200
C5.3	Parity	Selects the parity. Options: even parity (default) / odd parity / no parity
C5.4	Data Format	Selects the data format. Options: Big Endian (default) / Little Endian
C5.5	Transmission Delay	Selects the delay between receiving the last byte of a request and sending the first byte of the response. Range: 0..40ms (default = 0ms)
C5.6	Stop Bits	Selects the number of stop bits. Options: 1 (default) / 2
C5.7	Information	Displays information about the device.

Refer to the standard handbook of the converter for connection details.

Modbus connections

Terminals	Description
B-	Sign. A (D0-)
B	Common 0 V
B+	Sign. B (D1+)

6.1 General information concerning the protocol

Using RTU (Remote Terminal Unit) format, data is transmitted as 8 bit binary characters. There are no special characters to determine the start and end of a message frame.

Synchronisation is achieved by a minimum silent period of at least 3.5 character times before the start of each frame transmission and a maximum silent period of 1.5 character times between characters in the same frame.

6.2 RTU frame format

The format of the query and response frames vary slightly depending upon the command function. The basic form is outlined below.

Command function	Frame format	Description
Silent period	3.5 x T	All transmissions must be preceded by a minimum silent period of 3.5 x T, where T is the transmission time of a single character. This can be calculated from the baud rate, e.g. at 19.2 kb no parity with 1 stop bit (10 bits), T = 520 µs.
Slave address	8 bits	This is a single byte slave address which is transmitted first and must be in the range of 1...247. Address 0 is reserved for a broadcast address which all slaves should recognise, and therefore requires no response.
Function code	8 bits	This is an eight bit code in the range of 1...255 although only 126 functions exist as the codes 129...255 represent an error condition. An error condition occurs when the addressed slave does not accept the command, in which case it responds with the function code + 128, i.e. with its MSB set to 1.
Register start address or byte count when required	8 bit byte count 16 bit address	**Register start address:** for a query command that requires data to be returned, this field will contain the 16 bit start address of the register (or data) to be returned. Note that the signal converter uses protocol addresses. Therefore the register address listed is the actual number required in the Modbus command. **E.g:** to access input register 30006, the register start address is 30006dec = 7536hex. **Byte count:** In general this is only present in frames that are transferring data, and has a value equal to the number of bytes contained in the data field. The data field is limited to a maximum of 250 bytes.
Number of points or data bytes when required	n × 8 bits	**Number of points:** for a query command that requires data to be returned, this field will contain the number of registers to be returned regardless of their bit size. **Data bytes:** contains the data requested. The signal converter can use Big Endian format (MSB first) or Little Endian format (LSB first).
CRC	16 bits	This field contains a 16 bit CRC which is calculated on all the data bits of the message bytes.

6.3 Addressing

In the following tables the Modbus protocol addresses / data addresses are listed.

Some systems cannot use addresses above 9999. For these systems there is the possibility to use the listed addresses but

- for Input Registers omit the leading 3 of 3xxxx;
- for Holding Registers omit the leading 4 of 4xxxx;
- for Input Registers replace the leading 20 of 20xxx by 9xxx.

Sometimes register numbers are asked for. The **register numbers** can be calculated by adding a 1 to the protocol address and using a prefix according to the block:

- prefix 1 for coils
- prefix 3 for Input Registers
- prefix 4 for Holding Registers

6.4 Overview of supported functions

The following table shows Modbus functions supported by RS485 interface.

Function code		Name	Access to
hex	dec		
01	01	Read Single Coil	Status of calibration functions, counter status (start/stop)
03	03	Read Holding Register	Acyclic Registers Signal converter configuration parameter
04	04	Read Input Register	Cyclic Register Measurement values, status values and calibration results
05	05	Write Single Coil	Cold start, warm start, error reset, start calibration function, start/stop counter
08	08	Diagnostics	-
10	16	Write Multiple Register	Acyclic Registers Signal converter configuration parameter
2B	43	Encapsulated Interface Transport	Transparent Channel, Read Device Identification

6.5 Device identification on the Modbus interface

The device identification is according to the category "Regular" according to the Modbus Application Protocol Specification V1.1a. Function code 43 / 14 (0x2B / 0x0E).

Modbus object Id	Object name / Description	Type	Content
0x00	VendorName	16 byte ASCII String	KROHNE
0x01	ProductCode	10 byte ASCII String	CG number; order code for the converter assembly
0x02	MajorMinorRevision	7 byte ASCII String	V1.0.xx
0x03	Vendor URL	32 byte ASCII String	www.krohne.com
0x04	ProductName	16 byte ASCII String	IFC 050
0x05	ModelName	16 byte ASCII String	Modbus
0x06	UserApplicationName	16 byte ASCII String	User tag, displayed on the header of the local screen

6.6 Coil registers

These function codes are used for access:

- 0x01 = read input coil
- 0x05 = write single coil

6.6.1 Converter controls

Coil address	Function
1000	Write 1 generates a cold start, write 0 is ignored
1001	Write 1 generates a warm start, write 0 is ignored
1002	Write 1 generates an error reset, write 0 is ignored

6.6.2 Counter controls

Modbus protocol address	Description	Settings			Converter Fct. No.
3000	Start / Stop Counter 1	Write	1	start counter	C3.1.5 / C3.1.6
		Write	0	stop counter	
		Read	1	counter is running	
		Read	0	counter is stopped	
3001	Start / Stop Counter 2	Write	1	start counter	C3.2.5 / C3.2.6
		Write	0	stop counter	
		Read	1	counter is running	
		Read	0	counter is stopped	
3003	Reset Counter 1	Write	1	reset counter	C3.1.3
		Write	0	-	
		Read	0	-	
3004	Reset Counter 2	Write	1	reset counter	C3.2.3
		Write	0	-	
		Read	0	-	

6.6.3 Start calibration functions

Modbus protocol address	Description	Settings			Converter Fct. No.
2000	Zero Calibration	Write	1	start function	C1.1.1
		Write	0	-	
		Read	1	calibration running	
		Read	0	calibration finished	
2001	Electrode Factor Calibration	Write	1	start function	C1.1.8
		Write	0	-	
		Read	1	calibration running	
		Read	0	calibration finished	

6.7 Input registers

All input registers in the Modbus protocol address range from 30000 to 38998 are mapped into the range 0 to 8998. All input registers in the Modbus protocol address range from 20000 to 20998 are mapped into the range 9000 to 9998. This is done to give systems with restriction on the address range access to the device.

Measurement and status values are read only and can be accessed as Modbus "Input Registers". Cyclic GDC objects are mapped to Modbus Registers.

Function code is 04 (0x04).

Modbus protocol address		Description and settings	Type	Number of registers
1st	2nd			
30000	0	**flow speed** [m/s]	float	2
30002	2	**volume flow** [m^3/s]	float	2
30004	4	**mass flow** [kg/s]	float	2
30006	6	**Operating time** [s]	float	2
30008	8	**Counter 1** [m^3] or [kg]	double float	4
30012	12	**Counter 2** [m^3] or [kg]	double float	4
30016	16	**long status sensor**	byte [4]	2
30018	18	**long status device**	byte [4]	2

Input register 30018 is not used up to now. This is included to fill the gap between the float and double float values and allows to read the full range of registers.

Also the result of a calibration procedure is accessed by an input register at Modbus Protocol Address 20000 or 9000. The type are one or more float values. This is depending on the used function (refer to "Calibration procedures").

Modbus protocol address		Description and settings	Type	Number of registers
1st	2nd			
20000	9000	Result of a calibration function	one or more float values	2 times number of values

6.8 Holding registers

All holding registers in the Modbus protocol address range from 40000 to 49998 are mapped into the range 0 to 9998. This is done to give systems with restriction on the address range access to the device.

Some parameters of the device can be accessed as Modbus "holding registers".

Function code 03 (0x03) for "Read" operations and function code 16 (0x10) for "Write" operations.

The holding registers are grouped into the following different sections.

6.8.1 Counter parameters

Modbus protocol address		Description and settings	Converter Fct. No.	Type	Number of registers
1st	2nd				
40000	0	**counter 1 function** 1 = sum counter 2 = + counter 3 = - counter 0 = off	C3.1.1	byte	1
40001	1	**counter 2 function** 1 = sum counter 2 = + counter 3 = - counter 0 = off	C3.2.1	byte	1
41000	1000	**set counter Cnt1 or read Cnt1** [m^3] or [kg]	C3.1.4	float	2
41002	1002	**set counter Cnt2 or read Cnt2** [m^3] or [kg]	C3.2.4	float	2
41004	1004	**preset counter 1** [m^3] or [kg]	C3.1.2	float	2
41006	1006	**preset counter 2** [m^3] or [kg]	C3.2.2	float	2

6.8.2 Process input filter and self test parameters

Modbus protocol address		Description and settings	Converter Fct. No.	Type	Number of registers
1st	2nd				
42000	2000	**flow direction** 0 = normal direction 1 = reverse direction	C1.2.2	byte	1
42001	2001	**pulse filter** 0 = off 1 = on 2 = automatic	C1.2.4	byte	1
42002	2002	**empty pipe** 0 = off 1 = conductivity 2 = empty pipe (S) 3 = empty pipe (F) 4 = empty pipe (I)	C1.3.1	byte	1
43000	3000	**limitation low** [m/s]	C1.2.1	float	2
43002	3002	**limitation high** [m/s]	C1.2.1	float	2
43004	3004	**time constant** [s]	C1.2.3	float	2
43006	3006	**pulse width** [s] only if pulse filter is set to 1: on	C1.2.5	float	2
43008	3008	**pulse limitation** [m/s] only if pulse filter is set to 1: on	C1.2.6	float	2
43010	3010	**pulse width** [s] only if pulse filter is set to 2: automatic	C1.2.5	float	2
43012	3012	**low flow cutoff value** [m/s]	C1.2.7	float	2
43014	3014	**limit empty pipe** [S/m]	C1.3.2	float	2
43016	3016	**Zero point** [m/s]	C1.1.1	float	2
43018	3018	**Electrode Factor EF** [m]	C1.1.8	float	2
43020	3020	**Conductivity Calpoint** [S/m]	C1.1.8	float	2
43022	3022	**Conductivity Calpoint** [S/m]	C1.1.8	float	2

6.8.3 Modbus parameters

Modbus protocol address	Description and settings	Converter Fct. No.	Type	Number of registers
50000	**baud rate** 1200 / 2400 / 3600 / 4800 / 9600 / 19200 (default) / 38400 / 57600 / 115200	C5.2	ulong	2
50002	**slave address**	C5.1	byte	1
50003	**parity** 0 = even parity (default) 1 = odd parity 3 = no parity	C5.3	byte	1
50004	**data format** 1 = Big Endian 2 = Little Endian	C5.4	byte	1

6.9 Diagnostics

The Modbus interface supports the diagnostic function defined by the "Modbus Application Protocol Specification".

Function code is 08 (0x08).

Sub function code		Name
hex	dec	
00	00	Return Query Data
01	01	Restart Communication Option
04	04	Force Listen Only Mode
0A	10	Clear Counters
0B	11	Return Bus Message Count
0C	12	Return Bus Communication Error Count
0D	13	Return Bus Exception Count
0E	14	Return Slave Message Count
0F	15	Return Slave No Response Count
10	16	Return Slave NAK Count (counter not used)
11	17	Return Slave Busy Count (counter not used)
12	18	Return Bus Character Overrun Count

6.10 Calibration procedures

6.10.1 Zero Flow Calibration

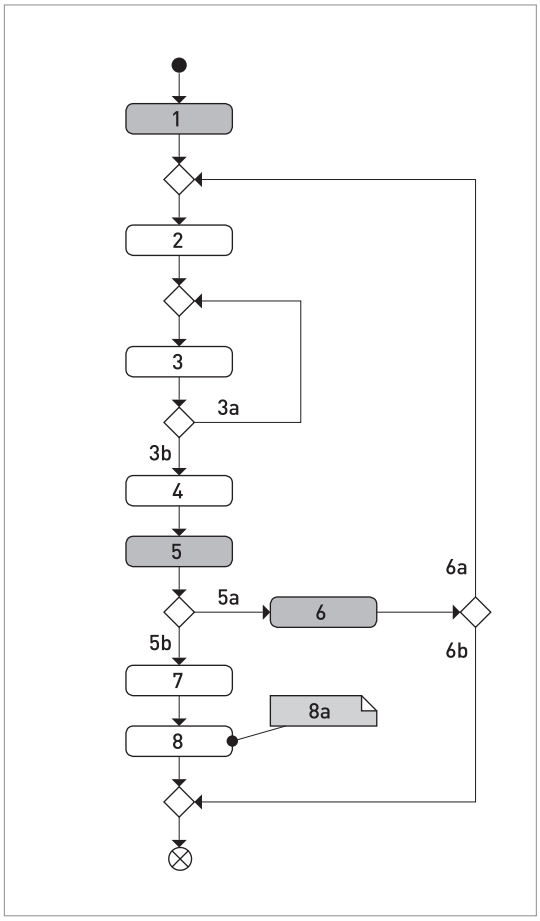

1	**User reduces the actual flow through the meter to zero**
2	**Start zero calibration:** Set single coil 2000 to 1 (Modbus Fct. 0x05)
3	**Check status of calibration** Read single coil 2000 (Modbus Fct. 0x01)
3a	[2000 == 1: calibration running]
3b	[2000 == 0: calibration complete]
4	**Read Calibration Value** Read Input Register 20000 type float (Modbus Fct. 0x04)
5	**User checks the calibration value:** -0.01...+0.01: good results -0.1...+0.1: acceptable result for difficult application
5a	Not ok
5b	ok
6	**User tries to improve the calibration situation**
6a	Improvement done
6b	Improvement not possible -Break-
7	**Write the calibration value** Write Holding Register 43016 type float (Modbus Fct. 0x10)
8	**Activate new values** Set single coil 1001 to 1 (Modbus Fct. 0x05)
8a	This results in a warm start of the device. Will take maximum 5s.

6.10.2 Conductivity Calibration

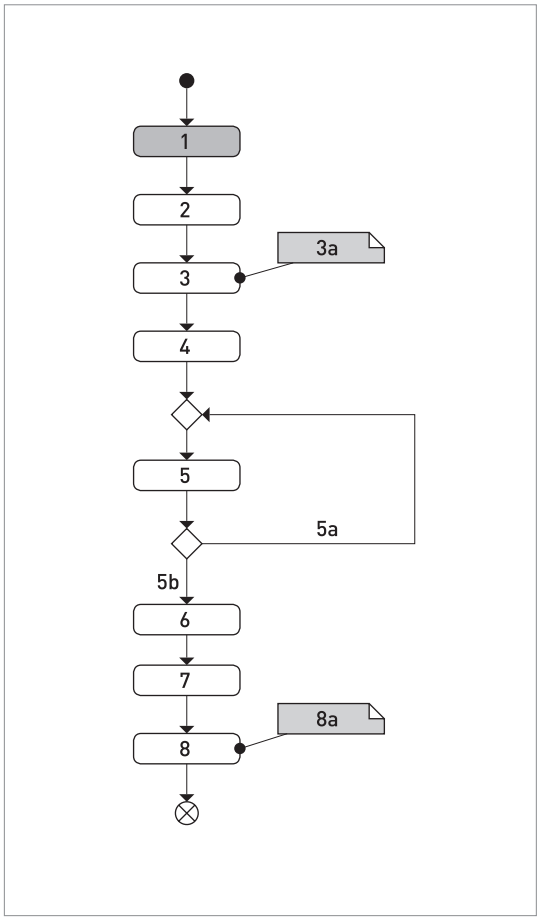

1	**User enters the actual conductivity in S/m** This is the target for the calibration
2	**Write actual conductivity** Write Holding Register 43020 type float (Modbus Fct. 0x10)
3	**Write actual conductivity** Write Holding Register 43022 type float (Modbus Fct. 0x10)
3a	The target value has to be written to both registers!
4	**Start conductivity calibration:** Set single coil 2001 to 1 (Modbus Fct. 0x05)
5	**Check status of calibration:** Read single coil 2001 (Modbus Fct. 0x01)
5a	[2001 == 1: calibration running]
5b	[2001 == 0: calibration complete]
6	**Read Calibration Value** Read Input Register 20000 type float (Modbus Fct. 0x04)
7	**Write the calibration value** Write Holding Register 43018 type float (Modbus Fct. 0x10)
8	**Activate new values** Set single coil 1001 to 1 (Modbus Fct. 0x05)
8a	This results in a warm start of the device. Will take maximum 5s.

KROHNE product overview

- Electromagnetic flowmeters
- Variable area flowmeters
- Ultrasonic flowmeters
- Mass flowmeters
- Vortex flowmeters
- Flow controllers
- Level meters
- Temperature meters
- Pressure meters
- Analysis products
- Products and systems for the oil & gas industry
- Measuring systems for the marine industry

Head Office KROHNE Messtechnik GmbH
Ludwig-Krohne-Str. 5
47058 Duisburg (Germany)
Tel.:+49 (0)203 301 0
Fax:+49 (0)203 301 10389
info@krohne.de

The current list of all KROHNE contacts and addresses can be found at:
www.krohne.com